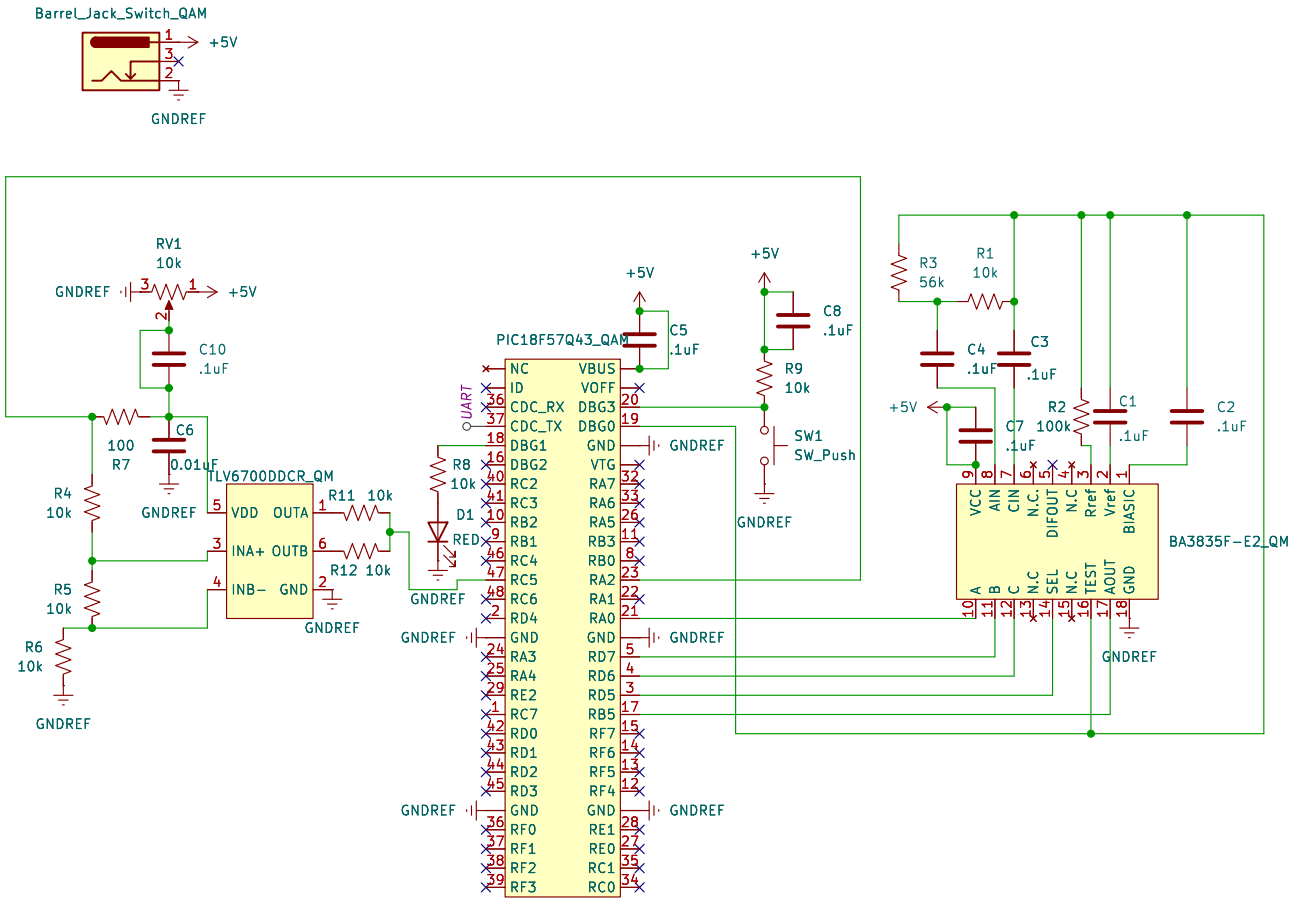

Group 204

Sheet: /

File: SubsystemSchematicDesign.kicad_sch

Title: Subsystem Schematic

Size: A4	Date: 2025−10−20	**Rev:**
KiCad E.D.A. 9.0.5		Id: 1/1