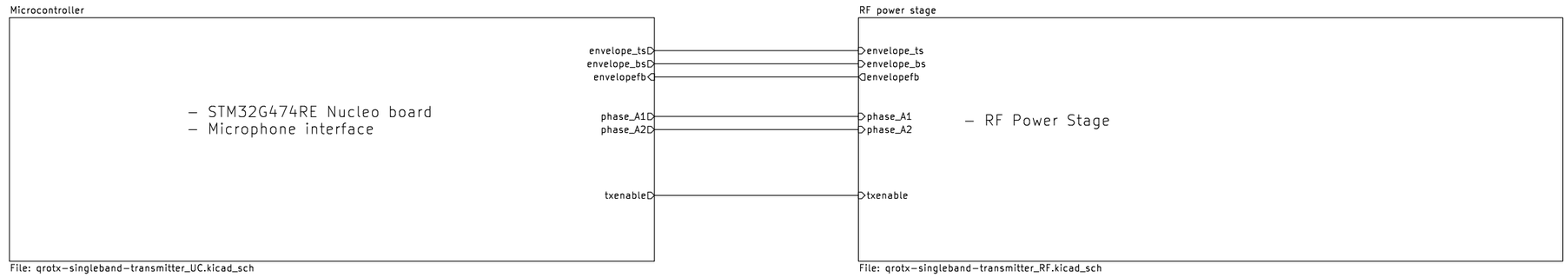

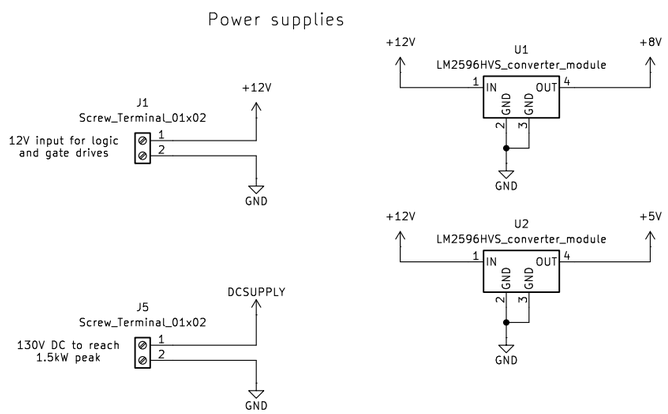

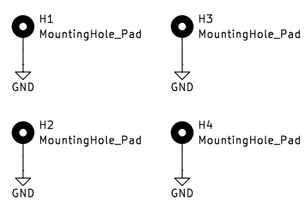

https://qrotx.org
Licensed under CERN–OHL–S v2 or any later version, https://ohwr.org/cern_ohl_s_v2.txt
Copyright (c) 2024–2026 Christian Riesch, christian@riesch.at
Christian Riesch K2CRI

Sheet: /
File: qrotx–singleband–transmitter.kicad_sch

Title: qrotx Single Band (40m) Transmitter

Size: USLedger	Date: 2026–04–06	**Rev: 0**
KiCad E.D.A. 9.0.7		Id: 1/3

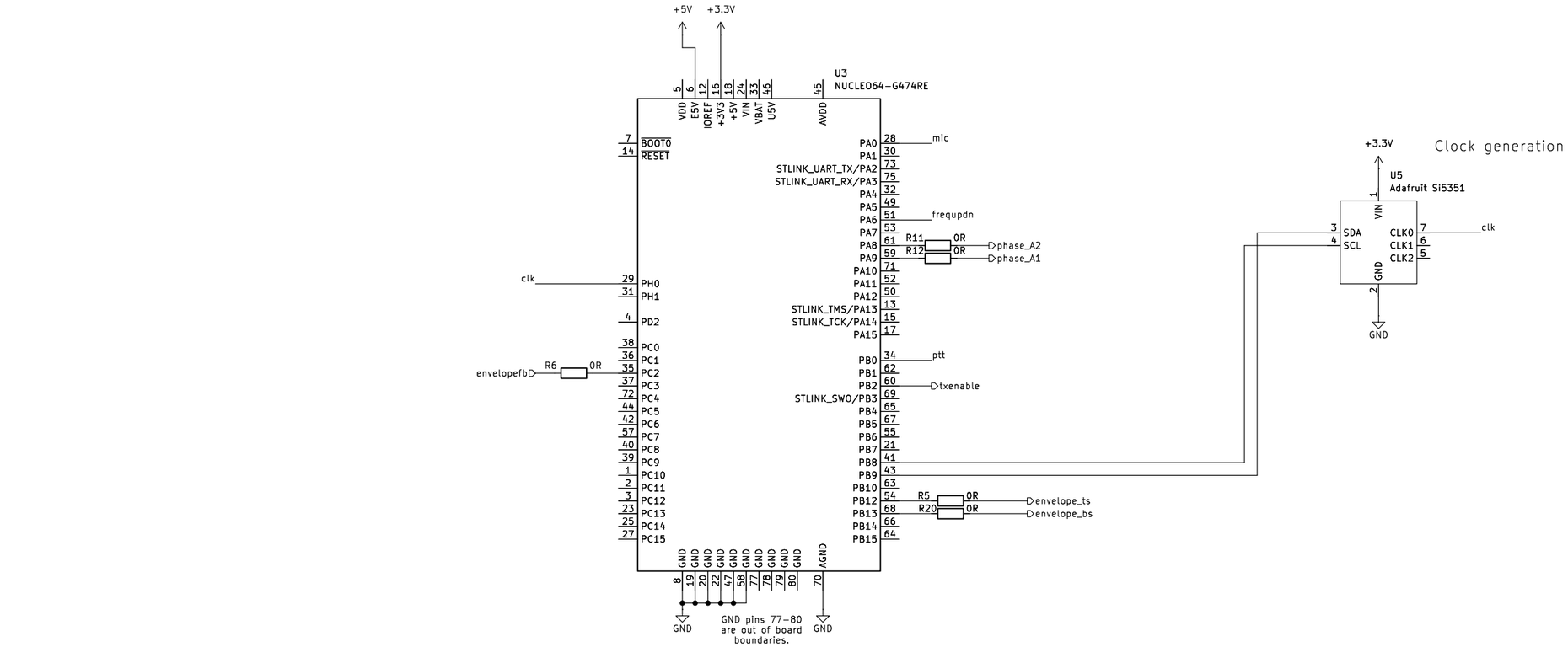

https://qrotx.org
Licensed under CERN-OHL-S v2 or any later version, https://ohwr.org/cern_ohl_s_v2.txt
Copyright (c) 2024-2026 Christian Riesch, christian@riesch.at

Christian Riesch K2CRI

Sheet: /Microcontroller/
File: qrotx-singleband-transmitter_UC.kicad_sch

Title: qrotx Single Band (40m) Transmitter

Size: USLedger	Date: 2026-04-06	**Rev: 0**
KiCad E.D.A. 9.0.7		Id: 2/3

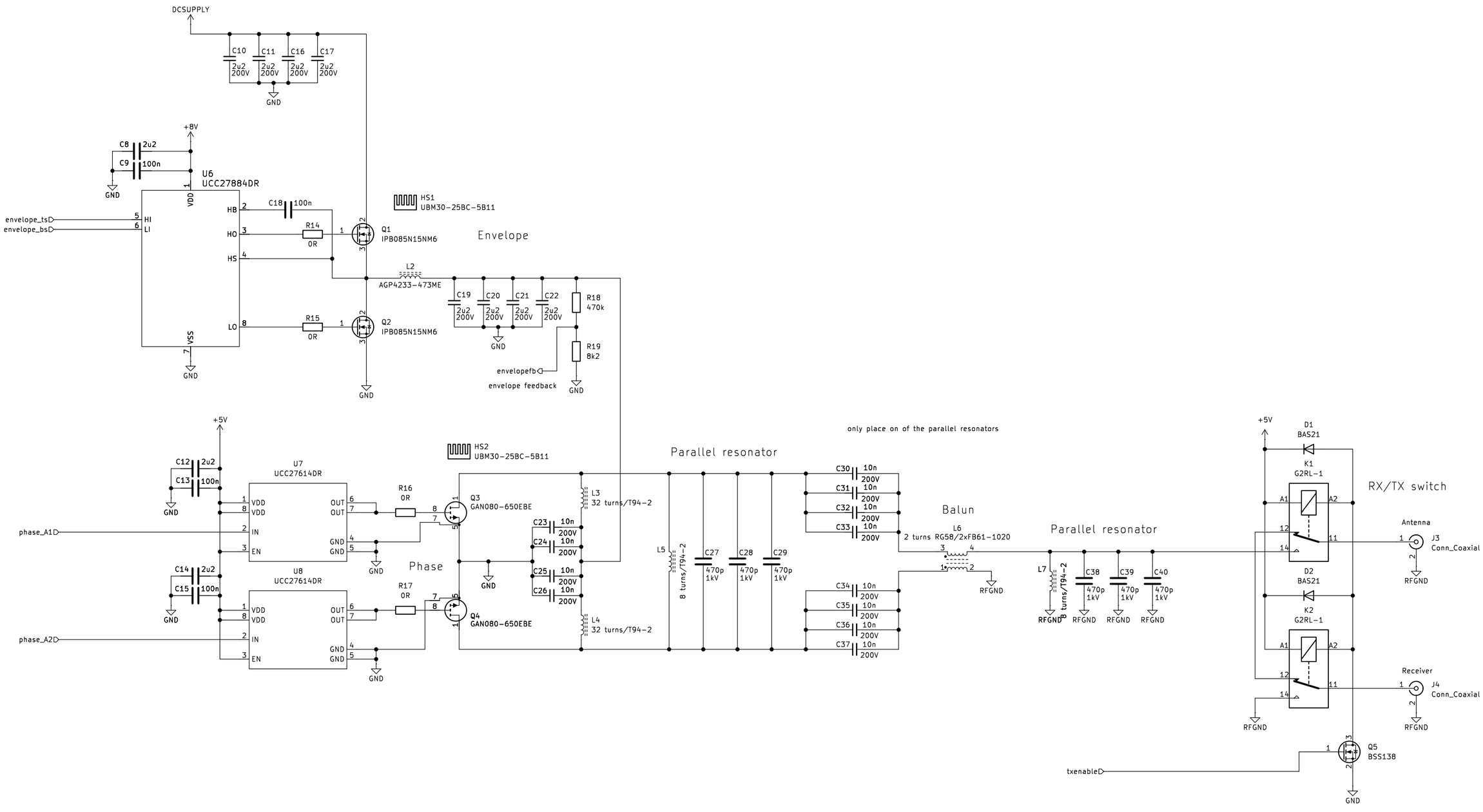

https://qrotx.org
Licensed under CERN-OHL-S v2 or any later version, https://ohwr.org/cern_ohl_s_v2.txt
Copyright (c) 2024-2026 Christian Riesch, christian@riesch.at

Christian Riesch K2CRI

Sheet: /RF power stage/
File: qrotx-singleband-transmitter_RF.kicad_sch

Title: qrotx Single Band (40m) Transmitter

Size: USLedger	Date: 2026-04-06	**Rev: 0**
KiCad E.D.A. 9.0.7		Id: 3/3