DIMNS MARKED DENOTES (S) SAFETY/REGULATION (F) CRITICAL FIT/FUNCTION (M) MAJOR FIT/FUNCTION (M2) MINOR FIT/FUNCTION

BEFORE POST CHROME GRINDING PLATING THICKNESS	FINISH GRINDING OD	AFTER POST CHROME GRINDING PLATING THICKNESS (M)	APPLICATION	CHROME HARDNESS (M) (PER 50 gms LOAD)
18±4 μm	Ø10.938–10.948	15±4μm	110000577	800 HV MIN.

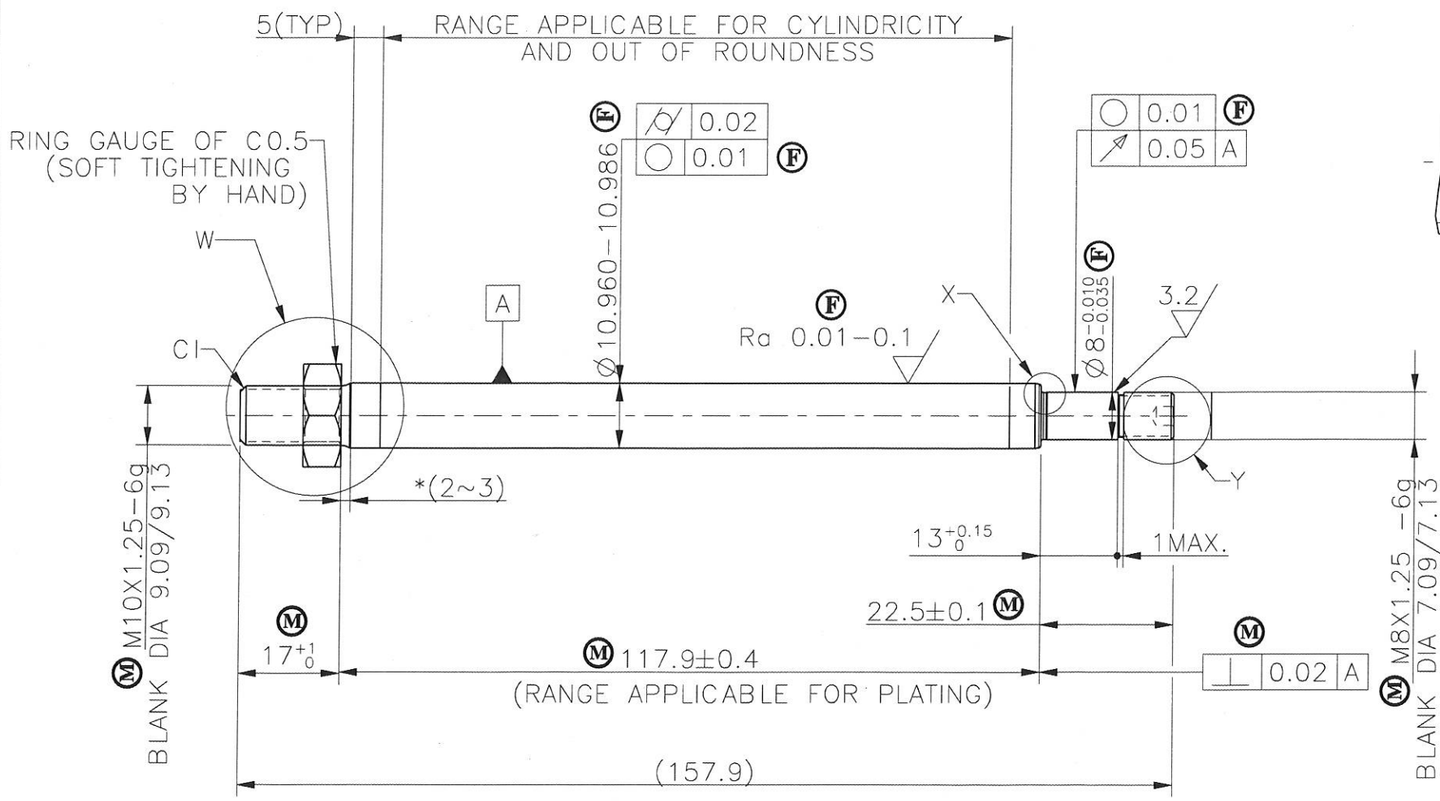

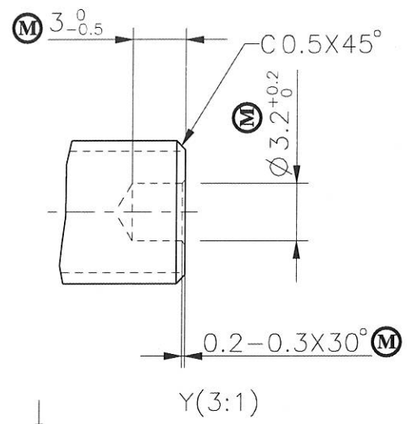

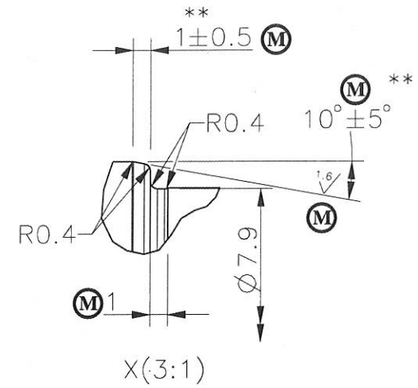

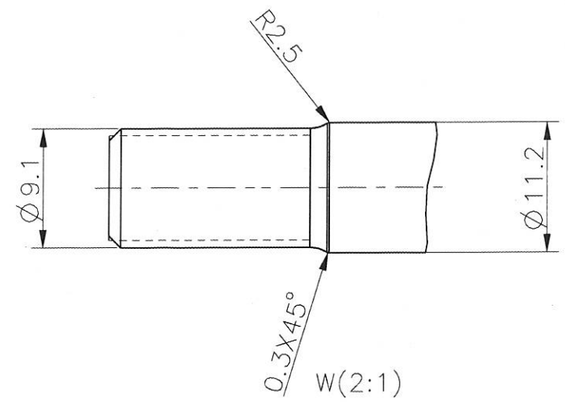

PROFILE AT MACHINING STAGE

NOTES:

1. TO BE GROUND TO FINISH SIZE AFTER PLATING . MATERIAL REMOVAL 3~5 μ ON DIAMETER.
2. (M) MUST BE NO CHATTER, SCRATCH, ABRASION, AND BRUISE ON SURFACE OF Ø11.
3. (M) MUST BE FREE FROM PINHOLE, ROUGH SURFACE AND BLISTER AFTER PLATING .
4. PARTING PIP NOT PERMITTED .

(F) 5a.CORROSION RESISTANCE TEST: UP TO 24Hrs CASS TEST , RATING NO.9 MIN.

5b.PLATING VALIDATION :CORROSION TEST AS MENTIONED, OTHER PARAMETERS AS PER GSP0103.

6. '*' MARKED DIMENSION IS FOR THREAD ROLLING RELIEF ON RADIUS R2.5.
7. '**' MARKED SURFACE FREE FROM RING MARKS/NAIL FEEL MARK TO BE VERIFIED VISUALLY.

DATE	REV	ALTERATION	E.C.N.NO
09.01.20	00	RELEASED FOR MASS PRODUCTION	800–04
15.10.19	A3	R0.4 WAS R0.2, DIMENSION 17 WAS 17.5, RZ VALUE CHANGED TO Ra,NOTES UPDATED, RELEASED FOR PRE PRODUCTION	800–02
26.08.19	A2	RELEASED FOR OTS AND PART NUMBER UPDATED	800–01
04.04.19	A1	RELEASED FOR PROTO	

SUPERSEDES :

GENERAL TOLERANCE ASPER : – PE/GT/001

DESIGN SOURCE REF.

RELEASE FOR ☐ COSTING ☐ PROTOTYPE ☐ OTS ☐ PRE–PRODUCTION ■ PRODUCTION

GABRIEL INDIA LTD.

SCALE	SHEETS	FINISH:	MASS:
1:1	1 / 1	HARD CHROME PLATING	105.5 g

DRAWN BY KAILAS K Kawale DATE: 09.01.20

CHECKED BY BALAJI D DATE: 09.01.20

APPROVED BY DIWAKAR DATE: 09.01.20

NAME:– PISTON ROD

MATERIAL:– BAR 3404010 AS PER GIL SPEC GP136-5

PART NO:– 25M4040015-5 REV. 00

ALL DIMENSIONS ARE IN MM. | NO MANUAL ALTERATION | DO NOT SCALE | IF IN DOUBT PLEASE ASK | SIZE : A3

FILE ARCHIVE LOCATION:

CONFIDENTIAL: THIS DRAWING AND THE INFORMATION THEREIN ARE THE PROPERTY OF GABRIEL INDIA LTD., AND SHALL NOT BE REPRODUCED, COPIED RECORDED IN ANY MEDIA, USED FOR ANY OTHER PURPOSE OR DELIVERED AND/OR DISCLOSED TO ANY THIRD PARTY WITHOUT WRITTEN CONSENT OF GABRIEL.