Hosur (10)

DIMNS MARKED DENOTES (S) SAFETY/REGULATION (F) CRITICAL FIT/FUNCTION (M) MAJOR FIT/FUNCTION (M2) MINOR FIT/FUNCTION

NO. 34040435-2

PART NO	DIM 'A'	DIM 'B'	ø 'C'	PLATINGTHICKNESS (F) (BEFORE POST CHROME GRINDING)	PLATINGTHICKNESS (F) (AFTER POST CHROME GRINDING)	FINISH GRINDø	MODEL	CORROSION RESISTANCE
34040435-2	160.2 (D1)	124.6	ø10.960 10.986	24±4µm	20±4µm	ø10.928–10.938	30002773	UP TO 48Hrs CASS TEST,RATING NO.8 MIN.

(124.10 ±0.40)

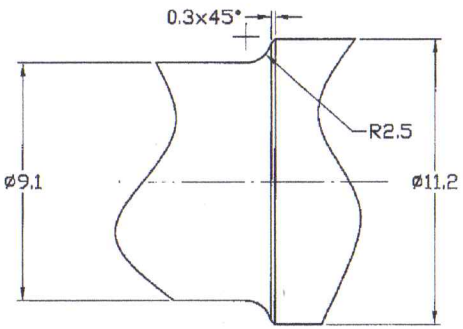

PROFILE AT MACHINING STAGE (SCALE 5:1) (DETAIL 'D')

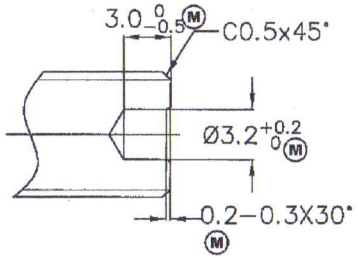

ENLARGED VIEW "Y"

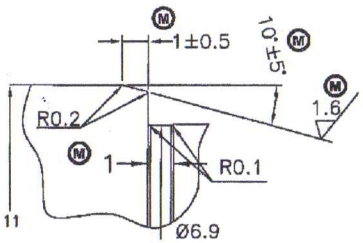

DETAIL:X (SCALE 5:1)

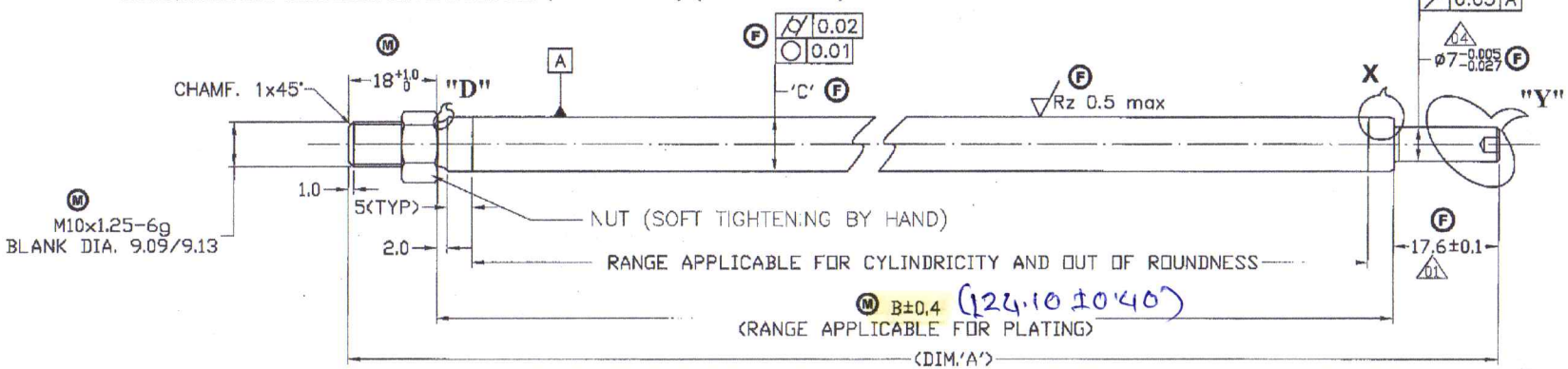

MEGACOAT SURFACE TRATMENTS LLP MASTER COPY

NOTES:–

1. TO BE GROUND TO FINISH SIZE AFTER PLATING. MATERIAL REMOVAL 3~5µ ON DIAMETER.
2. (M) MUST BE NO CHATTER, SCRATCH, ABRASION AND BRUISE NO SURFACE OF ø11
3. (M) MUST BE NO PIN HOLE, ROUGH SURFACE AND BLISTER AFTER PLATING
4. (M) CHROME HARDNESS – HV 800 MIN/25gms LOAD
5. PARTING PIP NOT PERMITTED.
6. (D1) PLATING VALIDATION : CORROSION RESISTANCE AS MENTIONED, OTHER PARAMETERS WILL BE AS PER GSP0103.

28.11.13	01	DIM 17.6&160.2 WERE 18 & 160.6 MASS UPDATED	46/'13
23.02.11	C0	MASS PRODUCTION RELEASE	10/'12
15.03.12	D1	FINISH GRING SIZE 10.928-10.938 WAS 10.938-10.948, PLATING THK. 24±4, 20±4 WERE 18±1, 15±4, NOTE 6 ADDED, RELEASED FOR PREPRODUCTION	D20/'12
18.10.11	D0	NEW RELEASE	D53/'11
DATE	REV	ALTERATION	E.C.N.NO

SUPERSEDES : 34040438 REV. 04

GENERAL TOLERANCE ASPER : PE / GT / 001

DESIGN SOURCE REF. –

SIZE A3

RELEASE FOR: ☐ COSTING ☐ PROTOTYPE ☐ OTS ☐ PREPRODUCTION ■ PRODUCTION

GABRIEL INDIA LTD.

SCALE	SHEETS	FINISH:	MASS :-
1:1	1/1	HARD CHROME PLATING	106 g (D1)

DRAWN BY B. Kar DATE : 10/4/14

CHECKED BY Vrishali DATE : 10/04/14

APPROVED BY DATE : 10/4/14

NAME :- **PISTON ROD**

MATERIAL :- (S) 3401010 AS PER GP 136-5

PART NO. :- 34040435-2 REV. 01

ALL DIMENSIONS ARE IN MM. | NO MANUAL ALTERATION | DO NOT SCALE | IF IN DOUBT PLEASE ASK

FILE ARCHIVE LOCATION: P:\R&D\PE\20mmTwin\Master Drawings

(10)

(Contract review was sign from GIL-Hosur for center length)

New Moped / UZ-Suzuki

CONFIDENTIAL: THIS DRAWING AND THE INFORMATION THEREIN ARE THE PROPERTY OF GABRIEL INDIA LTD., AND SHALL NOT BE REPRODUCED, COPIED RECORDED IN ANY MEDIA, USED FOR ANY OTHER PURPOSE OR DELIVERED AND/OR DISCLOSED TO ANY THIRD PARTY WITHOUT WRITTEN CONSENT OF GABRIEL.