DIMNS MARKED DENOTES (S) SAFETY/REGULATION (F) CRITICAL FIT/FUNCTION (M) MAJOR FIT/FUNCTION (M2) MINOR FIT/FUNCTION

PART NO.	DIM. 'A'	∅'C'	DIM. 'D'	AFTER P.C.G PLATING THICKNESS
114040165	156.4	∅10.960-10.986	111.1	15±4μm

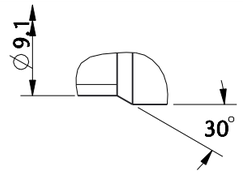

DETAIL A

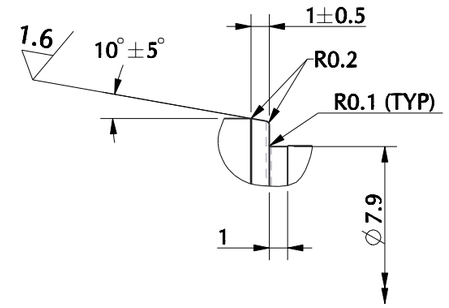

DETAIL B

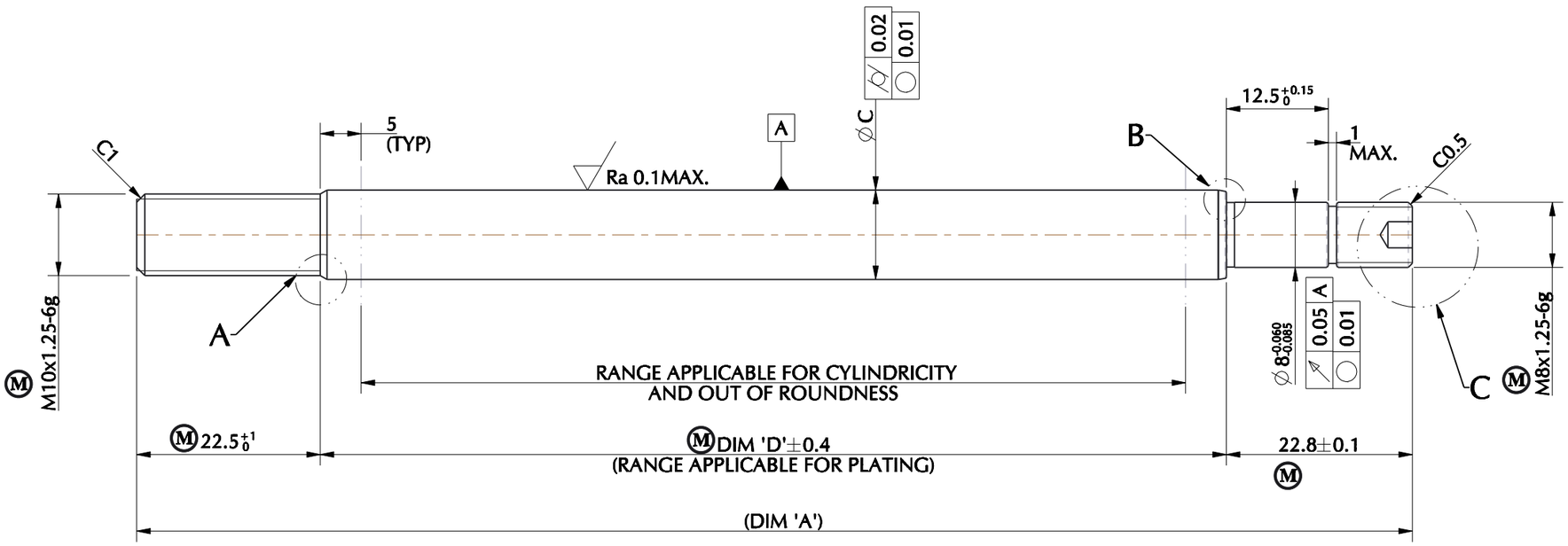

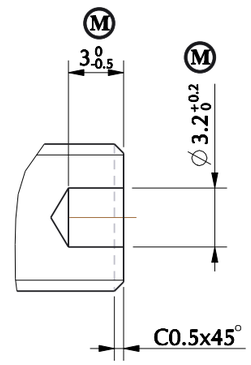

DETAIL C

NOTES:
1.MUST BE NO CHATTER, SCRATCH, ABRASION & BRUISE ON SURFACE OF ∅8.
2.MUST BE FREE FROM PINHOLE, ROUGH SURFACE AND BLISTER AFTER PLATING.
3.CHROME HARDNESS;HV 800 MIN./25gms LOAD.
4.PARTING PIP NOT PERMITTED.
5.CORROSION RESISTANCE TEST UPTO 24 hrs CASS TEST, RATING NO. 9 MIN.
6.PLATING VALIDATION AS PER GSP0103.

DATE	REV	ALTERATION	E.C.N.NO
01.10.21	A1	RELEASED FOR COSTING AND PROTO	21/041

SUPERSEDES :
GENERAL TOLERANCE ASPER : -
DESIGN SOURCE REF.
RELEASE FOR ■ COSTING ■ PROTOTYPE □ OTS □ PRE-PRODUCTION □ PRODUCTION

GABRIEL INDIA LTD.

SCALE	SHEETS	FINISH:	MASS:
NTS	1 / 1	REFER NOTES	TBD

DRAWN BY: KUNAL M
DATE: 01.10.21
CHECKED BY: SANJAY T
DATE: 01.10.21
APPROVED BY: DIWAKAR BHAT
DATE: 01.10.21

NAME:- PISTON ROD
MATERIAL:- BAR 3404010-AS PER GP 136-5
PART NO:- 114040165
REV. A1

ALL DIMENSIONS ARE IN MM. | NO MANUAL ALTERATION | DO NOT SCALE | IF IN DOUBT PLEASE ASK | SIZE : A3

MODEL : AM-PULSAR 180CC RSA

CONFIDENTIAL: THIS DRAWING AND THE INFORMATION THEREIN ARE THE PROPERTY OF GABRIEL INDIA LTD., AND SHALL NOT BE REPRODUCED, COPIED RECORDED IN ANY MEDIA, USED FOR ANY OTHER PURPOSE OR DELIVERED AND/OR DISCLOSED TO ANY THIRD PARTY WITHOUT WRITTEN CONSENT OF GABRIEL.