DIMNS MARKED DENOTES (S) SAFETY/REGULATION (F) CRITICAL FIT/FUNCTION (M) MAJOR FIT/FUNCTION (M2) MINOR FIT/FUNCTION

FINISH GRIND SIZE	BEFORE POST CHROME GRINDING	PLATING THK. AFTER POST CHROME GRINDING, DIM 'C' (F)	∅'C' (F)	MODEL
∅13.938~13.949	18±3μ	15±3μ	∅13.960~13.987	P1EF REAR SHOX

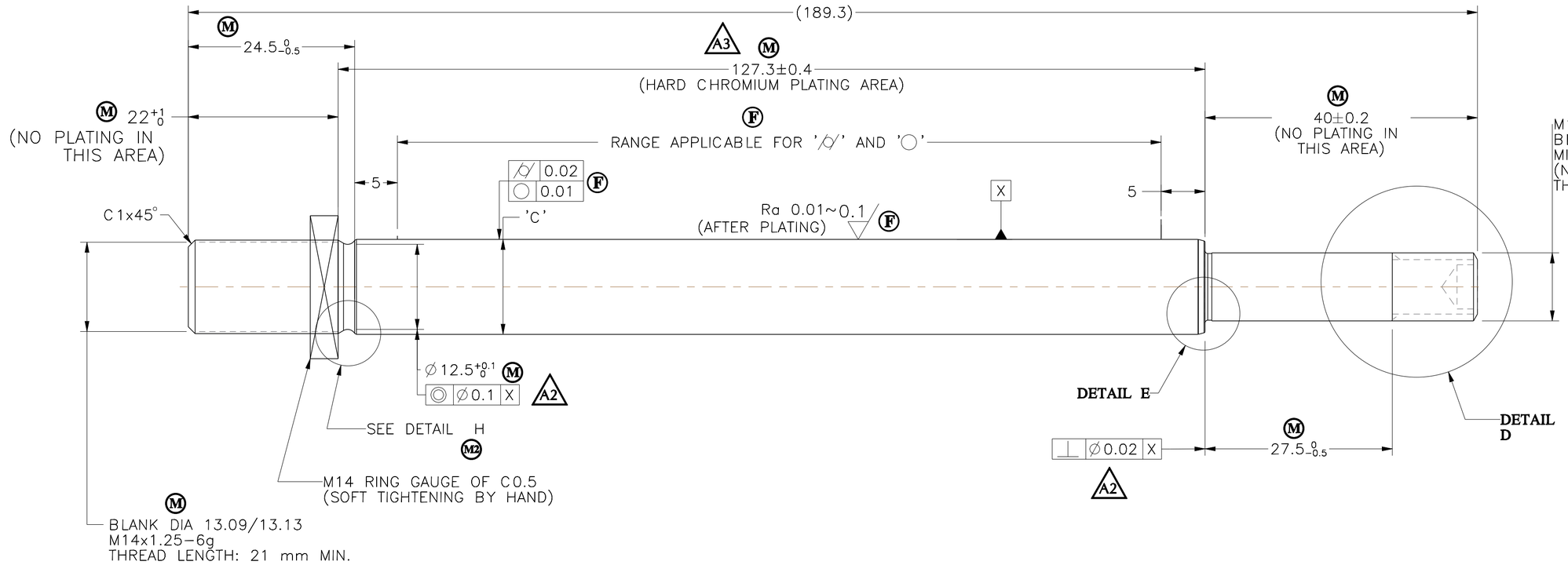

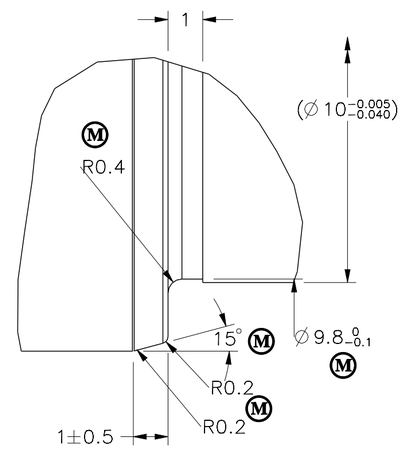

DETAIL E
SCALE 8:1

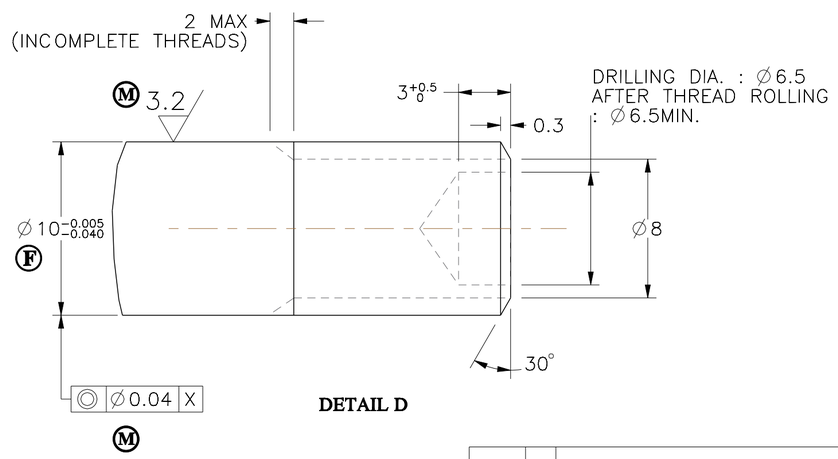

DETAIL D

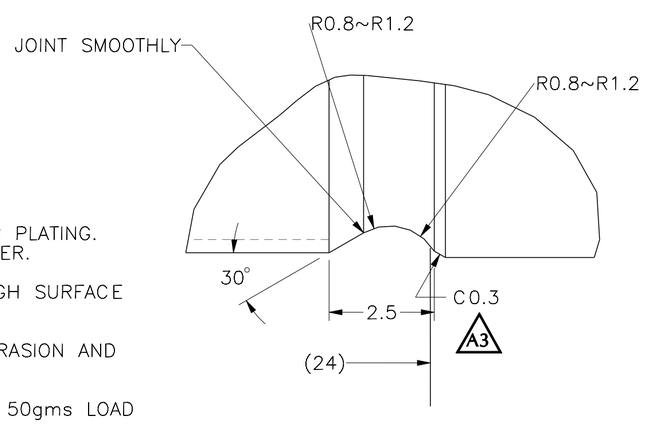

DETAIL H
SCALE 10:1

NOTE:

1. TO BE GROUND TO FINISH SIZE AFTER PLATING. MATERIAL REMOVAL 3~5μ ON DIAMETER.
2. (M) MUST BE FREE FROM PIN HOLE, ROUGH SURFACE & BLISTER AFTER PLATING.
3. (M) MUST BE NO CHATTER, SCRATCH, ABRASION AND BRUSIE ON SURFACE
4. (M) CHROME HARDNESS : HV 800 MIN. / 50gms LOAD
5. PARTING PIP NOT PERMITTED

6a. CORROSION RESISTANCE : CASS TEST 1 CYCLE (1 CYCLE =16Hrs SPRAY + 8 Hrs NO SPRAY) RATING NO. 8MIN
6b. PLATING VALIDATION : CORROSION RESISTANCE AS MENTIONED, OTHER PARAMETERS AS PER GSP 0103.

DATE	REV	ALTERATION	E.C.N.NO
28.9.17	A3	DIM 127.3 WAS 124.8. DIM CHANGED FOR EASY MEASUREMENT. C0.3 ADDED	211−05
31.8.17	A2	DIM Ø12.5 ADDED, GEOMETRIC TOLERANCE UPDATED. & PRE−PRODUCTION RELEASE.	211−02
1.12.16	A1	RELEASED FOR OTS	---
01.10.16	D0	RELEASED FOR COSTING	---

SUPERSEDES :
GENERAL TOLERANCE ASPER :PE /GT/001
DESIGN SOURCE REF.
RELEASE FOR
☐ COSTING ☐ PROTOTYPE ☐ OTS ■ PRE−PRODUCTION ☐ PRODUCTION

GABRIEL INDIA LTD.

SCALE	SHEETS	FINISH:	MASS:
1:1	1 / 1	HARD CHROME	201g

DRAWN BY SARAVANAN.D
DATE: 28.9.17
CHECKED BY SARAVANAN.D
DATE: 28.9.17
APPROVED BY DIVAKAR BHAT
DATE: 28.9.17

NAME:− **PISTON ROD**
MATERIAL:− **SAE 1035 (R.M = ∅14.25±0.04) AS PER GP 136-5**
PART NO:− **184040165** REV. **A3**

ALL DIMENSIONS ARE IN MM. | NO MANUAL ALTERATION | DO NOT SCALE | IF IN DOUBT PLEASE ASK | SIZE : A2

CONFIDENTIAL: THIS DRAWING AND THE INFORMATION THEREIN ARE THE PROPERTY OF GABRIEL INDIA LTD., AND SHALL NOT BE REPRODUCED, COPIED RECORDED IN ANY MEDIA, USED FOR ANY OTHER PURPOSE OR DELIVERED AND/OR DISCLOSED TO ANY THIRD PARTY WITHOUT WRITTEN CONSENT OF GABRIEL.