DIMNS MARKED DENOTES AS PER STD GWP 0101 : SAFETY/REGULATION (F) CRITICAL FIT/FUNCTION (M) MAJOR FIT/FUNCTION (M2) MINOR FIT/FUNCTION

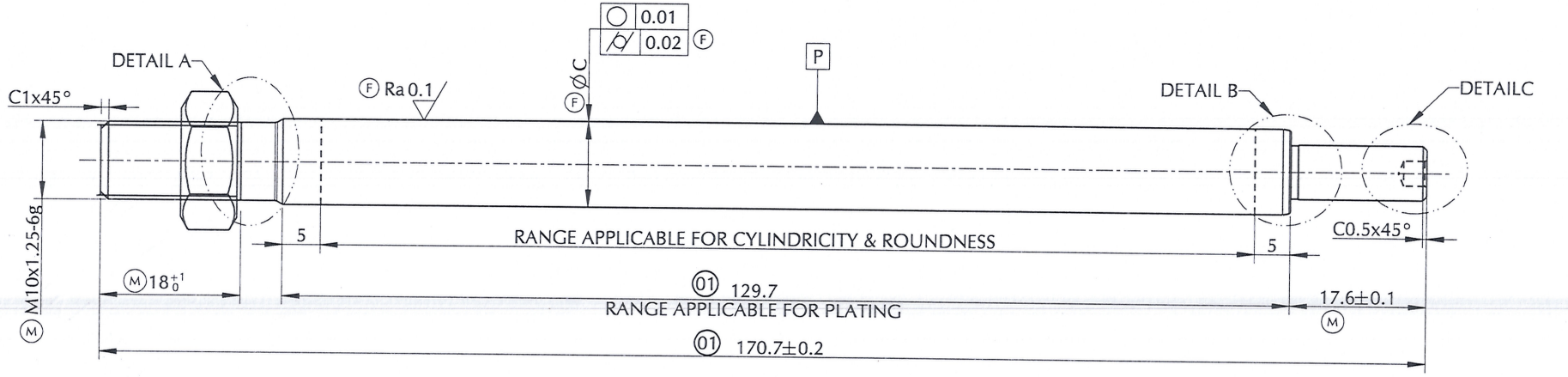

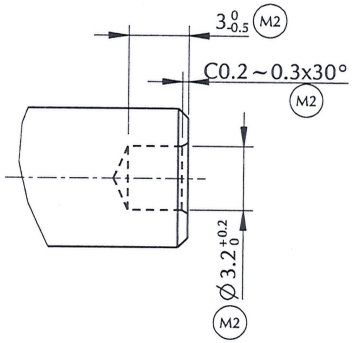

DETAIL C

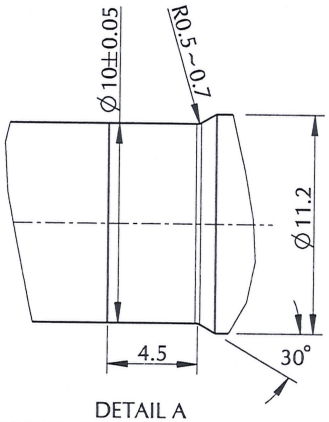

DETAIL A
PROFILE AT MACHINING STAGE

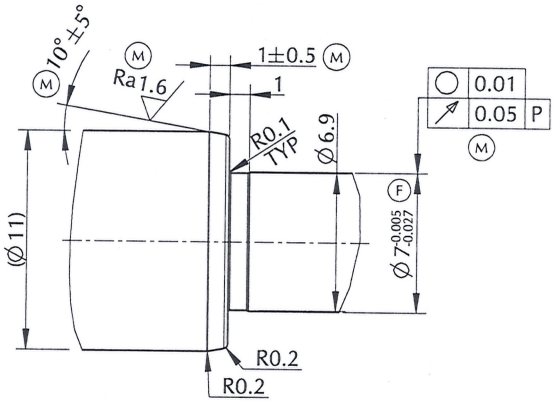

DETAIL B

TABLE 1 :

PARAMETER	VALUE
FINISH GRINDING	Ø10.928 ~ Ø10.938
PLATING THK.BEFORE POST CHROME GRINDING	24±4 MICRON
PLATING THK. AFTER POST CHROME GRINDING	20±4 MICRON
Ø C	Ø10.960 ~ Ø10.986

NOTE :
1) TO BE GROUND TO FINISH SIZE AFTER PLATING & MATERIAL REMOVAL SHALL BE 3 TO 5 MICRON ON DIAMETER
2) PART TO BE FREE FROM BURR, CHATTER, SCRATCHES, ABRASION & BRUISE ON SURFACE Ø11
3) PART TO BE FREE FROM PIN HOLES, ROUGH SURFACE & BLISTER AFTER PLATING
(M) 4) PLATING VALIDATION & SURFACE DEFECT QUALITY CHECK AS PER GSP0103 HARDNESS : MIN 800 HV / 25 gm LOAD
5) PARTING PIP NOT PERMITTED
6) CORROSION RESISTANCE : UPTO 24 HOURS CASS TEST, RATING 7 MIN
7) THREAD LENGTH TO BE CHECKED BY TIGHTENING NUT OF M10x1.25-6H

MASTER COPY ONLY IF RED GABRIEL NASHIK

DATE	REV	ALTERATION	ERN.NO.
25.04.18	01	LENGTH MODIFIED FROM 172.7 TO 170.7	18/058
05.03.18	00	RELEASED FOR PRODUCTION	18/040

SUPERSEDES : 34040965 REV 00
GENERAL TOLERANCE ASPER : - PE/GT/001
DESIGN SOURCE REF.
RELEASE FOR: ☐ COSTING ☐ PROTOTYPE ☐ OTS ☐ PRE-PRODUCTION ■ PRODUCTION

GABRIEL INDIA LTD.

SCALE	SHEETS	FINISH:	MASS:
NTS	1 / 1	HARD CHROME PLATING	[114] gm

DRAWN BY: KHM DATE: 25.04.18
CHECKED BY: MVA DATE: 25.04.18
APPROVED BY: SAT DATE: 25.04.18

NAME:- PISTON ROD
MATERIAL:- BAR 3401010 AS PER GP 136-5
PART NO:- 34040965 REV. 01

ALL DIMENSIONS ARE IN mm. | NO MANUAL ALTERATION | DO NOT SCALE | IF IN DOUBT PLEASE ASK | SIZE : A3

MODEL NAME : SR50-RSA

FILE ARCHIVE LOCATION: -

CONFIDENTIAL: THIS DRAWING AND THE INFORMATION THEREIN ARE THE PROPERTY OF GABRIEL INDIA LTD., AND SHALL NOT BE REPRODUCED, COPIED RECORDED IN ANY MEDIA, USED FOR ANY OTHER PURPOSE OR DELIVERED AND/OR DISCLOSED TO ANY THIRD PARTY WITHOUT WRITTEN CONSENT OF GABRIEL.