DIMNS MARKED DENOTES (S) SAFETY/REGULATION (F) CRITICAL FIT/FUNCTION (M) MAJOR FIT/FUNCTION (M2) MINOR FIT/FUNCTION

FINISH GRINDING ØD	HARD CHROME THICKNESS (BEFORE POST CHROME GRINDING) Cr(μm)	HARD CHROME THICKNESS (AFTER POST CHROME GRINDING) Cr(μm)	AFTER POST CHROME GRINDING Ø'D'
(M) Ø12.399~12.409	18±4	(M) 15±4	(F) Ø12.424~12.444

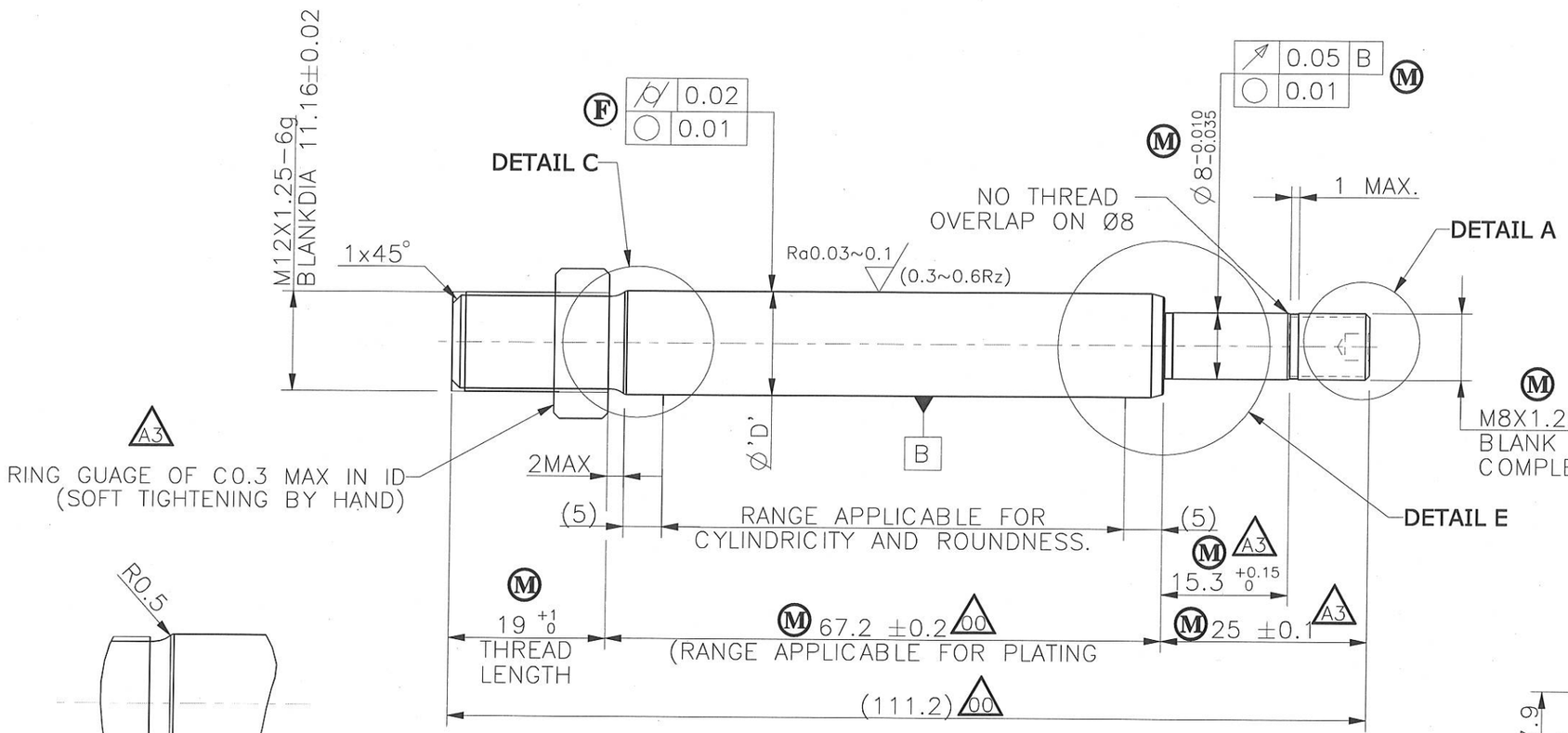

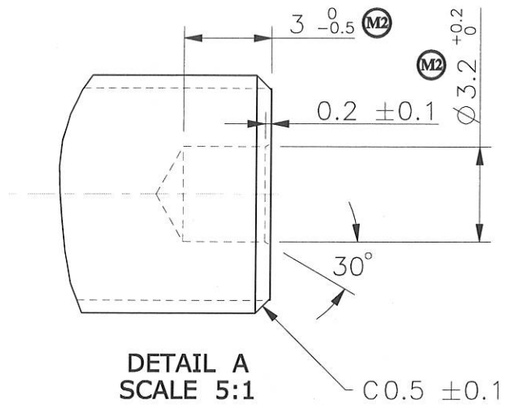

DETAIL A
SCALE 5:1

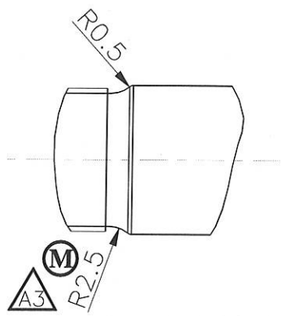

DETAIL C
SCALE 2:1

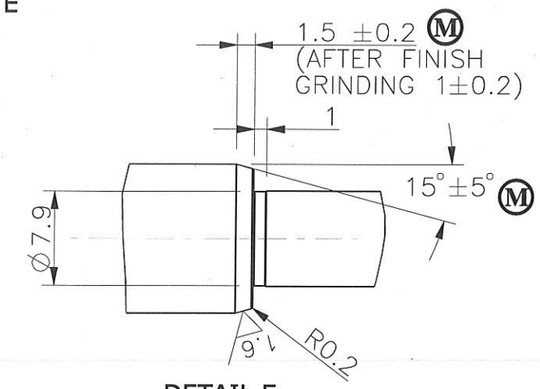

DETAIL E

MASTER COPY ONLY IF RED

NOTES:-

1. MUST BE FREE FROM PINHOLE,ROUGH SURFACE AND BLISTER AFTER PLATING.
2. (F) CHROME HARDNESS: HV 800MIN./25 gms LOAD.
3. FINISH TO 0.03~0.1Ra(0.3~0.6Rz).
4. PARTING PIP NOT PERMITTED.
5. CORROSION RESISTANCE TEST CASS TEST : 48 Hrs,RATING NO.9 MIN.
6. GRADING TO BE MADE FOR PISTON ROD OD FOR POST CHROME GRINDING PROCESS.
7. TO BE GROUND TO FINISH SIZE AFTER PLATING, MATERIAL REMOVAL 3~5 MICRON ON DIAMETER.
8. THREADING AS PER IS : 4218 (PART 1)2001.

DATE	REV	ALTERATION	E.C.N.NO
19.01.19	00	MASS PRODUCTION RELEASE.111.2 WAS 110.2 67.2 WAS 66.2	423-09
07.09.18	A4	PRE-PRODUCTION RELEASE DIM 110.2 WAS 110,66.2 WAS 66	423-08
15.09.17	A3	DIM 110 WAS 107,66 WAS 64.5,25 WAS 23.5. 15.3 WAS 13.5. R 2.5 WAS R 2.0.MASS 87g WAS 85g.RING GUAGE DETAILS ADDED	423-02
29.05.17	A2	RELEASED FOR OTS	423-01

SUPERSEDES :

GENERAL TOLERANCE ASPER : -

DESIGN SOURCE REF.

RELEASE FOR
☐ COSTING ☐ PROTOTYPE ☐ OTS ☐ PRE-PRODUCTION ■ PRODUCTION

GABRIEL INDIA LTD.

SCALE	SHEETS	FINISH:	MASS:
1:1	1 / 1	REFER TABLE	88 g (A3)

DRAWN BY: PAVAN
DATE: 19.01.19
CHECKED BY: DIWAKAR BHAT
DATE: 19.01.19
APPROVED BY: DIWAKAR BHAT
DATE: 19.01.19

NAME:- PISTON ROD MACHINING & PLATING

MATERIAL:- BAR 3404010 AS PER GP136-5

PART NO:- 64040175 (A1) REV. 00

ALL DIMENSIONS ARE IN MM. | NO MANUAL ALTERATION | DO NOT SCALE | IF IN DOUBT PLEASE ASK | SIZE : A3

CONFIDENTIAL: THIS DRAWING AND THE INFORMATION THEREIN ARE THE PROPERTY OF GABRIEL INDIA LTD., AND SHALL NOT BE REPRODUCED, COPIED RECORDED IN ANY MEDIA, USED FOR ANY OTHER PURPOSE OR DELIVERED AND/OR DISCLOSED TO ANY THIRD PARTY WITHOUT WRITTEN CONSENT OF GABRIEL.