DIMNS MARKED DENOTES (S) SAFETY/REGULATION (F) CRITICAL FIT/FUNCTION (M) MAJOR FIT/FUNCTION (M2) MINOR FIT/FUNCTION

TABLE:

DIM "A"	DIM "D"	∅C	BEFORE POST CHROME GRINDING PLATING THICKNESS	FINISH GRINDING SIZE ∅ "C"	AFTER POST (M) CHROME GRINDING PLATING THICKNESS
203.9	123.2±0.2	∅12.424 −12.444	18±3 μm	∅12.400−12.410	15±3 μm

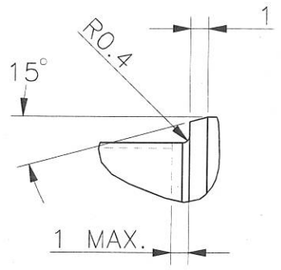

DETAIL-D

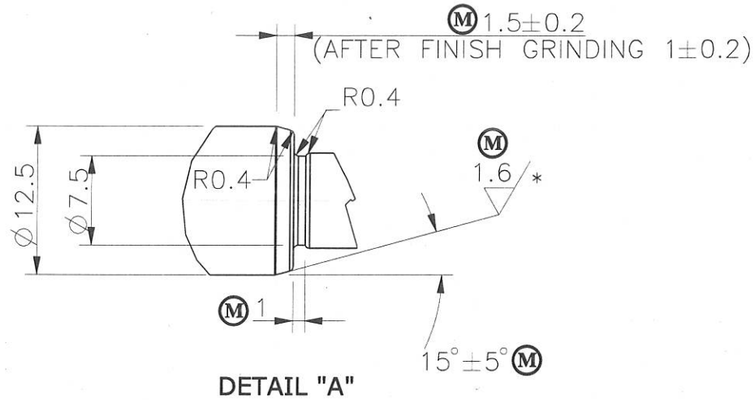

DETAIL "A"

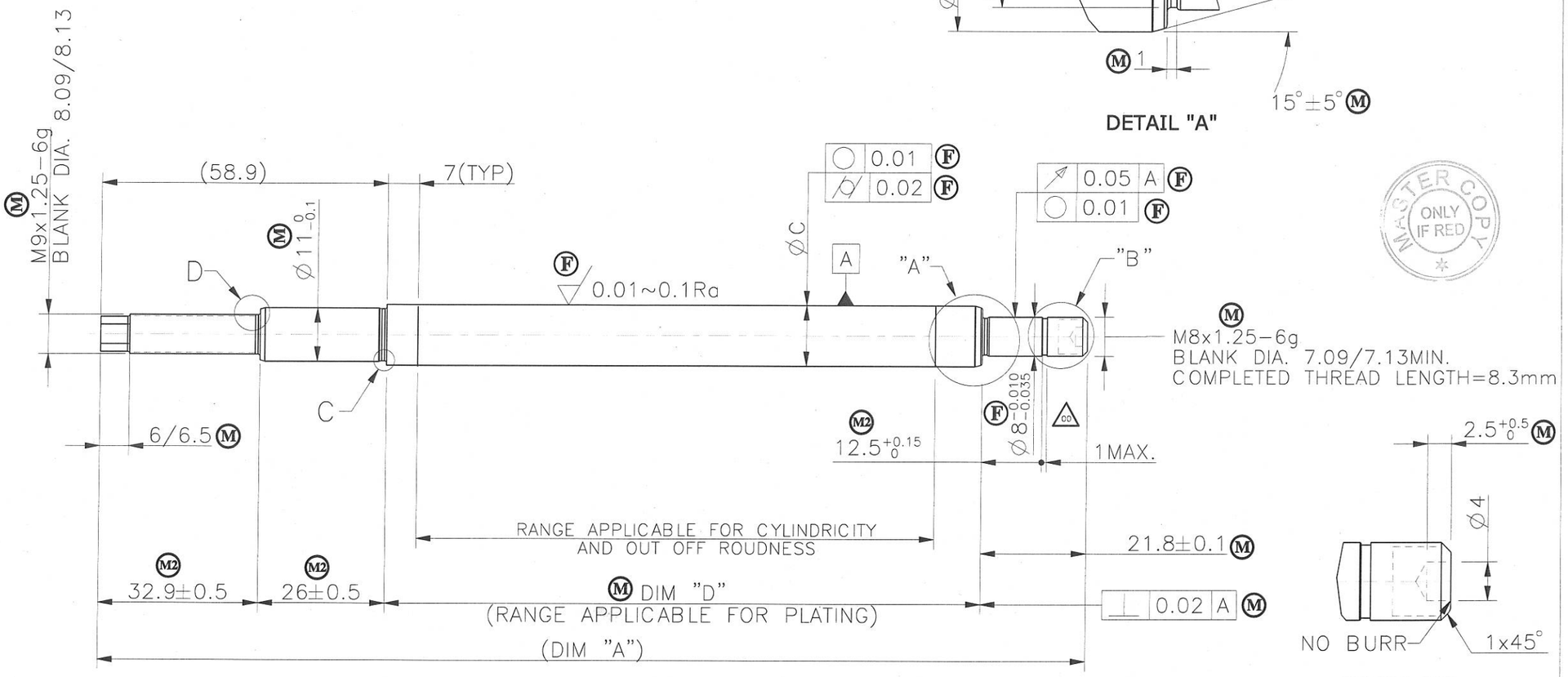

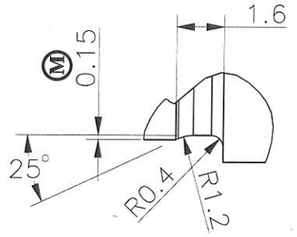

DETAIL "C"

DETAIL "B"

NOTES:

(M) 1.MUST BE FREE FROM PIN HOLES,ROUGH SURFACE AND BLISTER AFTER PLATING.
(M) 2.CHROME HARDNESS: HV 800 MIN/50g LOAD.
3.PARTING PIP NOT PERMITTED.
(F) 4.CORROSION RESISTANCE TEST: UP TO 24Hrs CASS TEST, RATING NO: 9 MIN.
5.GRADING TO BE MADE ON PISTON ROD O.D FOR POST CHROME GRINDING PROCESS.
6.THREADING AS PER IS:4218(PART−1)2001.
7.PLATING VALIDATION: CORROSION RESISTANCE AS MENTIONED OTHER PARAMETERS AS PER GSP0103.
8. '*' MARKED SURFACE FREE FROM RING MARKS/NAIL FEEL MARK TO BE VERIFIED VISUALLY.

DATE	REV	ALTERATION	E.C.N.NO
17.06.19	00	RELEASED FOR MASS PRODUCTION, DIM. 8 TOL. REVISED.	600−06
19.04.19	A5	RELEASED FOR PRE PRODUCTION,NOTE 8 ADDED, R0.4 WAS 0.1,Rz REMOVED.	600−05
26.12.18	A4	NOTE 4 REVISED, DIM. 1 WAS 2.2	600−04
06.09.18	A3	DIM 203.9 WAS 202.2, 58.9 WAS 57.2, 32.9 WAS 31.2.	600−03
02.08.18	A2	DIM 12.5 WAS 14.8, 123.2 WAS 123.5, 57.2 WAS 56.9	600−02
10.05.18	A1	RELEASE FOR OTS	600−01

SUPERSEDES :
GENERAL TOLERANCE ASPER : −
DESIGN SOURCE REF.
RELEASE FOR: ☐ COSTING ☐ PROTOTYPE ☐ OTS ☐ PRE−PRODUCTION ■ PRODUCTION

GABRIEL INDIA LTD.

SCALE	SHEETS	FINISH:	MASS:
1:1	1 / 1	HARD CHROME PLATING	158 g

DRAWN BY MADHU — DATE: 17.06.19
CHECKED BY VRISHALI — DATE: 17.06.19
APPROVED BY DIWAKAR — DATE: 17.06.19

NAME:− PISTON ROD
MATERIAL:− BAR- G 080 022 AS PER GP136-5
PART NO:− 64040185 REV. 00

ALL DIMENSIONS ARE IN MM. | NO MANUAL ALTERATION | DO NOT SCALE | IF IN DOUBT PLEASE ASK | SIZE : A3

CONFIDENTIAL: THIS DRAWING AND THE INFORMATION THEREIN ARE THE PROPERTY OF GABRIEL INDIA LTD., AND SHALL NOT BE REPRODUCED, COPIED RECORDED IN ANY MEDIA, USED FOR ANY OTHER PURPOSE OR DELIVERED AND/OR DISCLOSED TO ANY THIRD PARTY WITHOUT WRITTEN CONSENT OF GABRIEL.

MASTER COPY ONLY IF RED