DIMNS MARKED DENOTES (S) SAFETY/REGULATION (F) CRITICAL FIT/FUNCTION (M) MAJOR FIT/FUNCTION (M2) MINOR FIT/FUNCTION

TABLE:

DIM.'A'	DIM.'D'	FINISH GRINDING SIZE Ø'C'	BEFORE POST (M) CHROME GRINDING PLATING THICKNESS	AFTER POST (M) CHROME GRINDING PLATING THICKNESS	Ø'C' (F)	MODEL
154.8	113.8	Ø12.400–12.410	18±3μm	15±4μm	Ø12.424–12.444	U333

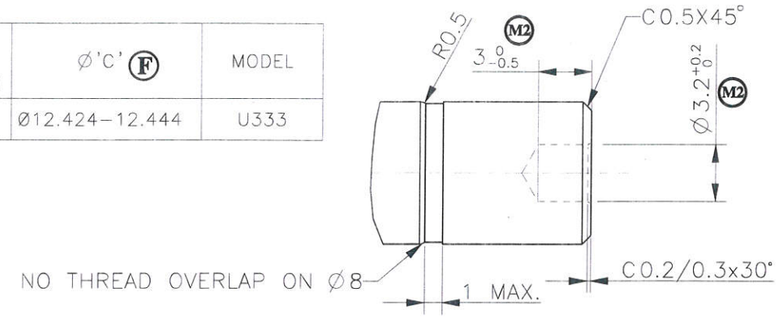

DETAIL 'C' (3:1)

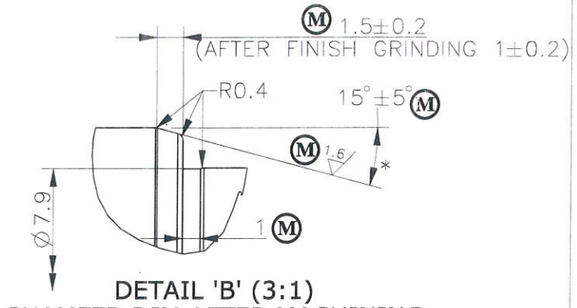

DETAIL 'B' (3:1)
CHAMFER DIM AFTER MACHINING

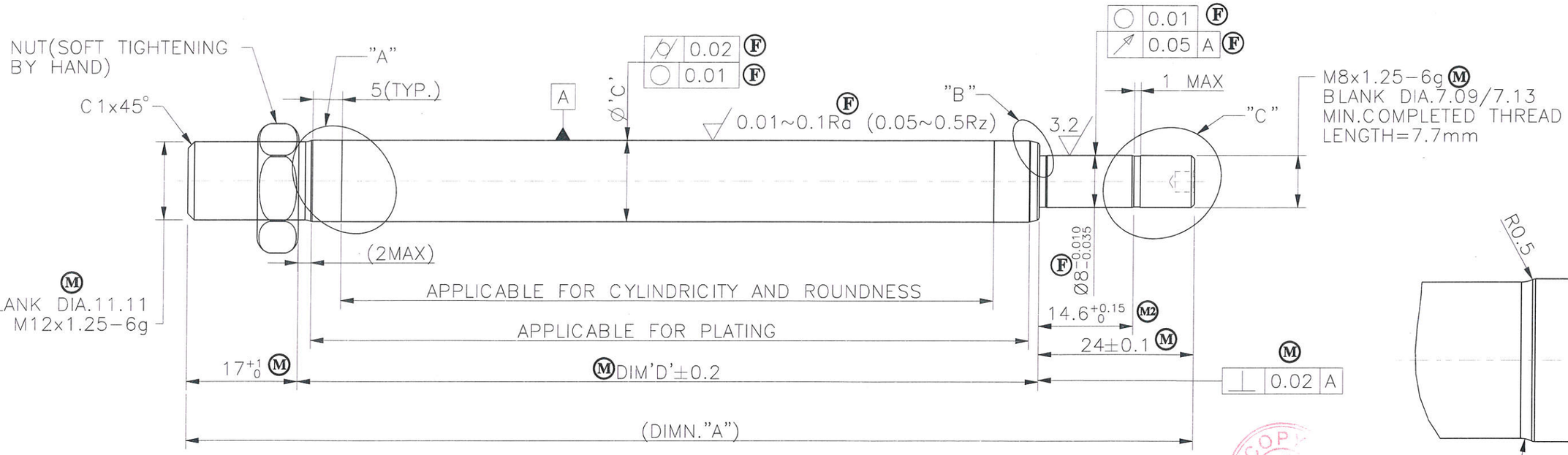

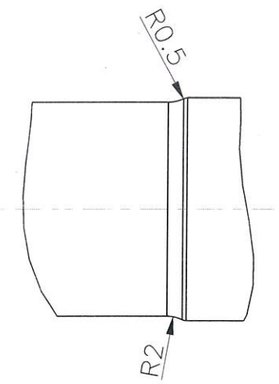

DETAIL 'A' (3:1)
PROFILE AT MACHINING STAGE

NOTES:

(M) 1. MUST BE FREE FROM PINHOLE,ROUGH SURFACE AND BLISTER AFTER PLATING.
(M) 2. CHROME HARDNESS: HV 800MIN./50 g LOAD.
3. PARTING PIP NOT PERMITTED.
(F) 4. CORROSION RESISTANCE TEST : UP TO 24 Hrs CASS TEST,RATING NO.9 MIN.
5. THREADING AS PER IS : 4218 (PART–1) 2001
6. GRADING TO BE MADE ON PISTON ROD OD FOR POST CHROME GRINDING PROCESS
7. PLATING VALIDATION: CORROSION RESISTANCE AS MENTIONED OTHER PARAMETERS AS PER GSP0103.
8. '*' MARKED SURFACE FREE FROM RING MARKS/NAIL FEEL MARK TO BE VARIFIED VISUALLY

DATE	REV	ALTERATION	E.C.N.NO
23.09.2020	00	RELEASED FOR MASS PRODUCTION	830–06
15.07.2020	A6	ADDED CRITICAL FUNCTION TO 'C' UPDATED ACTUAL WEIGHT	830–05
04.06.2020	A5	RELEASED FOR PRE–PRODUCTION 15±4 WAS 15±3, R0.4 WAS R0.1/0.2	830–05
23.01.20	A4	DIM 14.6 0 0.15 WAS 15.8 0 0.15 ,154.8 WAS 156 24±0.1 WAS 25.2±0.1,	830–03
16.08.19	A3	DIM 15.8 0 0.15 WAS 15.3 0 0.15 25.2±0.1 WAS 25±0.1, THREAD LENGTH,7.7 WAS 7.5, RELEASED FOR OTS	830–02
14.03.19	A2	DIM 155.8 WAS 156 DIM 113.8 WAS 114; ADDED NOTE# 8	830–01

SUPERSEDES :D4

GENERAL TOLERANCE ASPER :

DESIGN SOURCE REF.

RELEASE FOR: ☐ COSTING ☐ PROTOTYPE ☐ OTS ☐ PRE–PRODUCTION ■ PRODUCTION

GABRIEL INDIA LTD.

SCALE	SHEETS	FINISH:	MASS:
3:2	1 / 1	REFER NOTES	126.2g

DRAWN BY: SANTHOSH KUMAR — DATE: 23.09.2020

CHECKED BY: VRISHALI — DATE: 23.09.2020

APPROVED BY: DIWAKAR BHAT — DATE: 23.09.2020

NAME:– PISTON ROD

MATERIAL:– BAR–G 080022 AS PER GP136–5

PART NO:– 64040195 — REV. 00

ALL DIMENSIONS ARE IN MM. | NO MANUAL ALTERATION | DO NOT SCALE | IF IN DOUBT PLEASE ASK | SIZE : A3

U333

FILE ARCHIVE LOCATION: PROE/D/DEV PROJECTS/TVSM PROJECTS/3–WHELLER/REAR SHOX PREPRODUCTION/01 DRAWINGS

CONFIDENTIAL: THIS DRAWING AND THE INFORMATION THEREIN ARE THE PROPERTY OF GABRIEL INDIA LTD., AND SHALL NOT BE REPRODUCED, COPIED RECORDED IN ANY MEDIA, USED FOR ANY OTHER PURPOSE OR DELIVERED AND/OR DISCLOSED TO ANY THIRD PARTY WITHOUT WRITTEN CONSENT OF GABRIEL.