NETWORK TOPOLOGY – team5.ca

PROJ2000 NET A01 – Taqi Zaidi, Quinn Parent, Matthew Telford, Jamie Lewis, Aidan Caideux

TOP-LEVEL OVERVIEW - Sites

Click for a more detailed view of each site

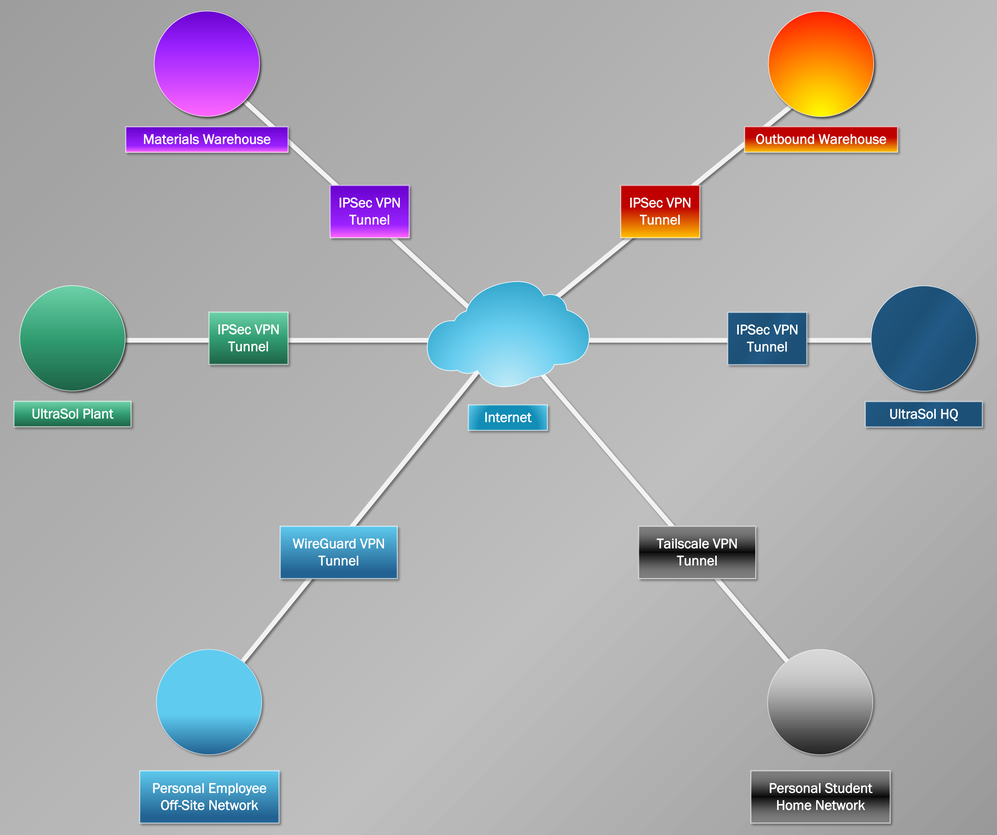

Click to switch to Proof of Concept PHYSICAL VIEW

NETWORK TOPOLOGY – team5.ca

PROJ2000 NET A01 – Taqi Zaidi, Quinn Parent, Matthew Telford, Jamie Lewis, Aidan Caideux

ULTRASOL HQ – Network View

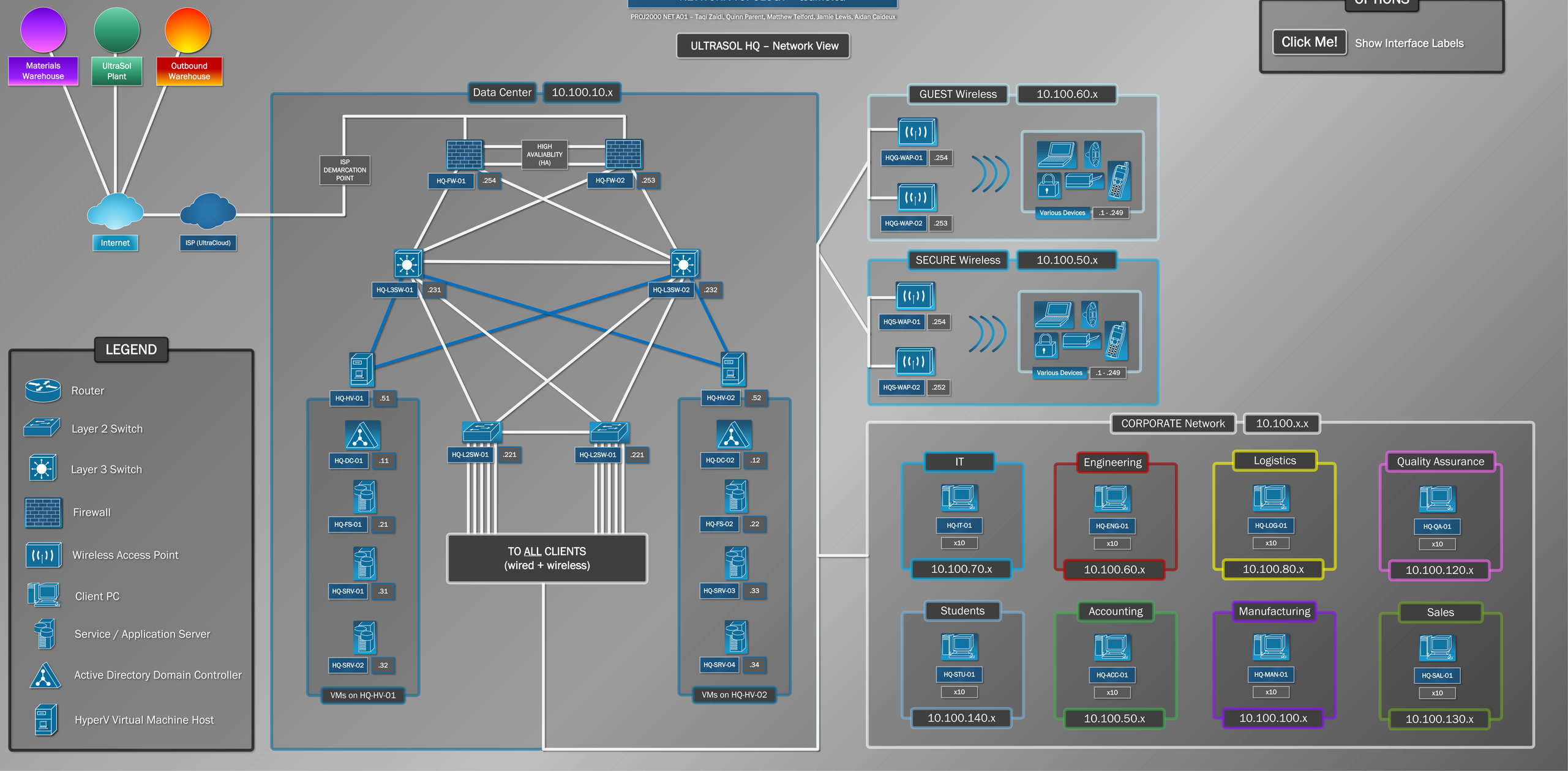

NETWORK TOPOLOGY – team5.ca

PROJ2000 NET A01 – Taqi Zaidi, Quinn Parent, Matthew Telford, Jamie Lewis, Aidan Caideux

ULTRASOL HQ – Network View

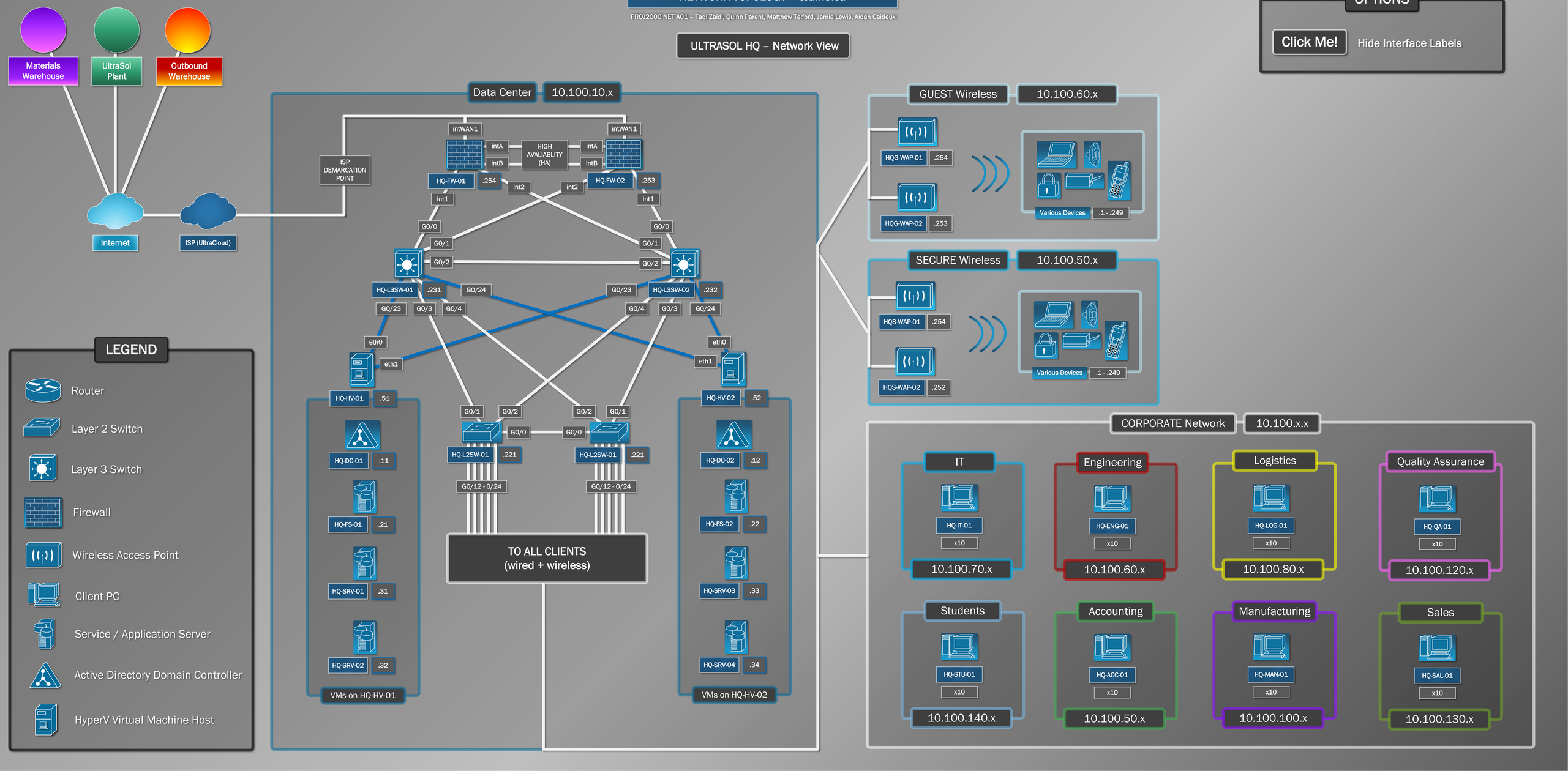

OPTIONS

Click Me! Hide Interface Labels

NETWORK TOPOLOGY – team5.ca

PROJ2000 NET A01 – Taqi Zaidi, Quinn Parent, Matthew Telford, Jamie Lewis, Aidan Caideux

ULTRASOL OUTBOUND WAREHOUSE – Network View

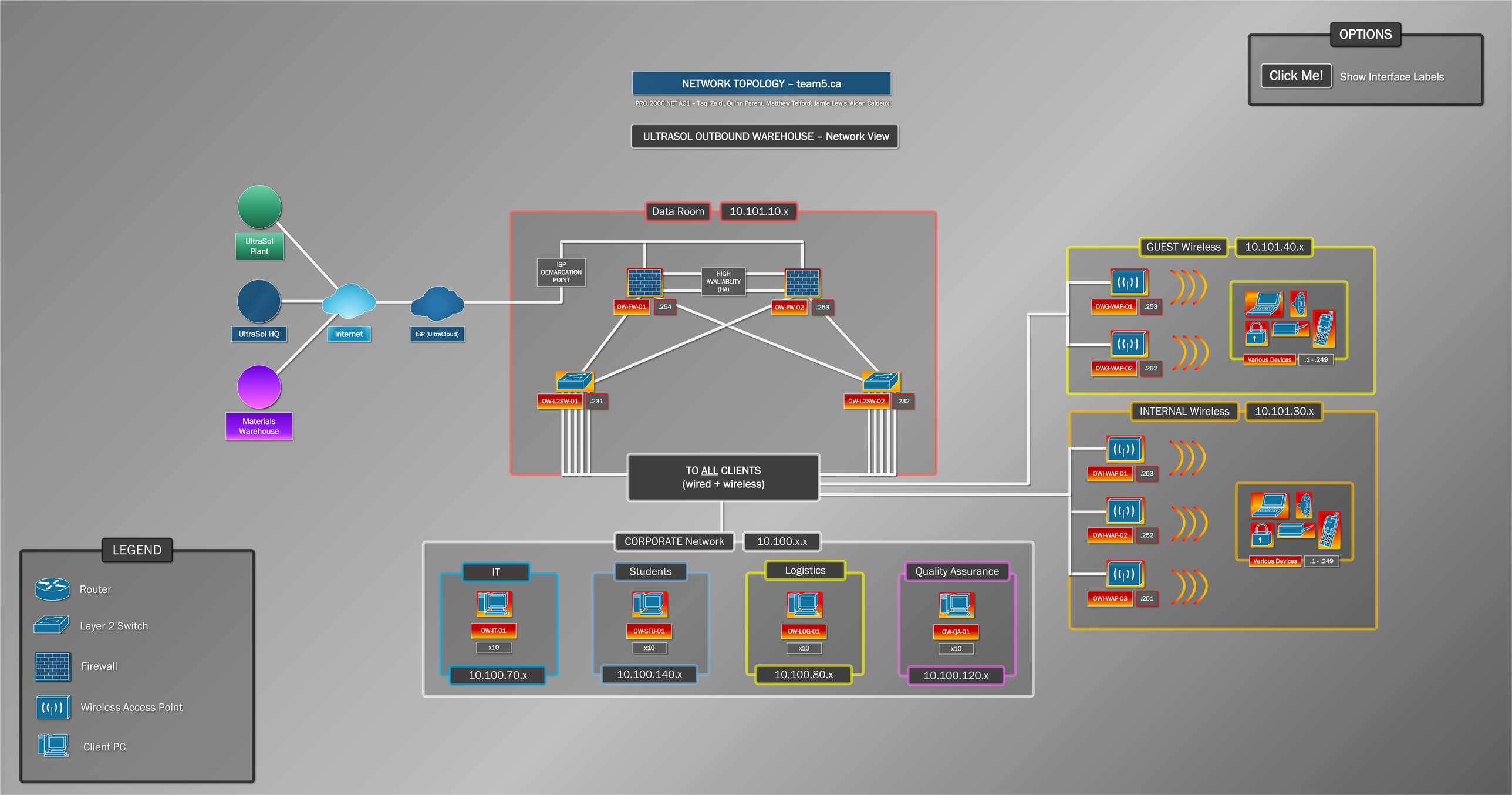

NETWORK TOPOLOGY – team5.ca

PROJ2000 NET A01 – Taqi Zaidi, Quinn Parent, Matthew Telford, Jamie Lewis, Aidan Caideux

ULTRASOL OUTBOUND WAREHOUSE – Network View

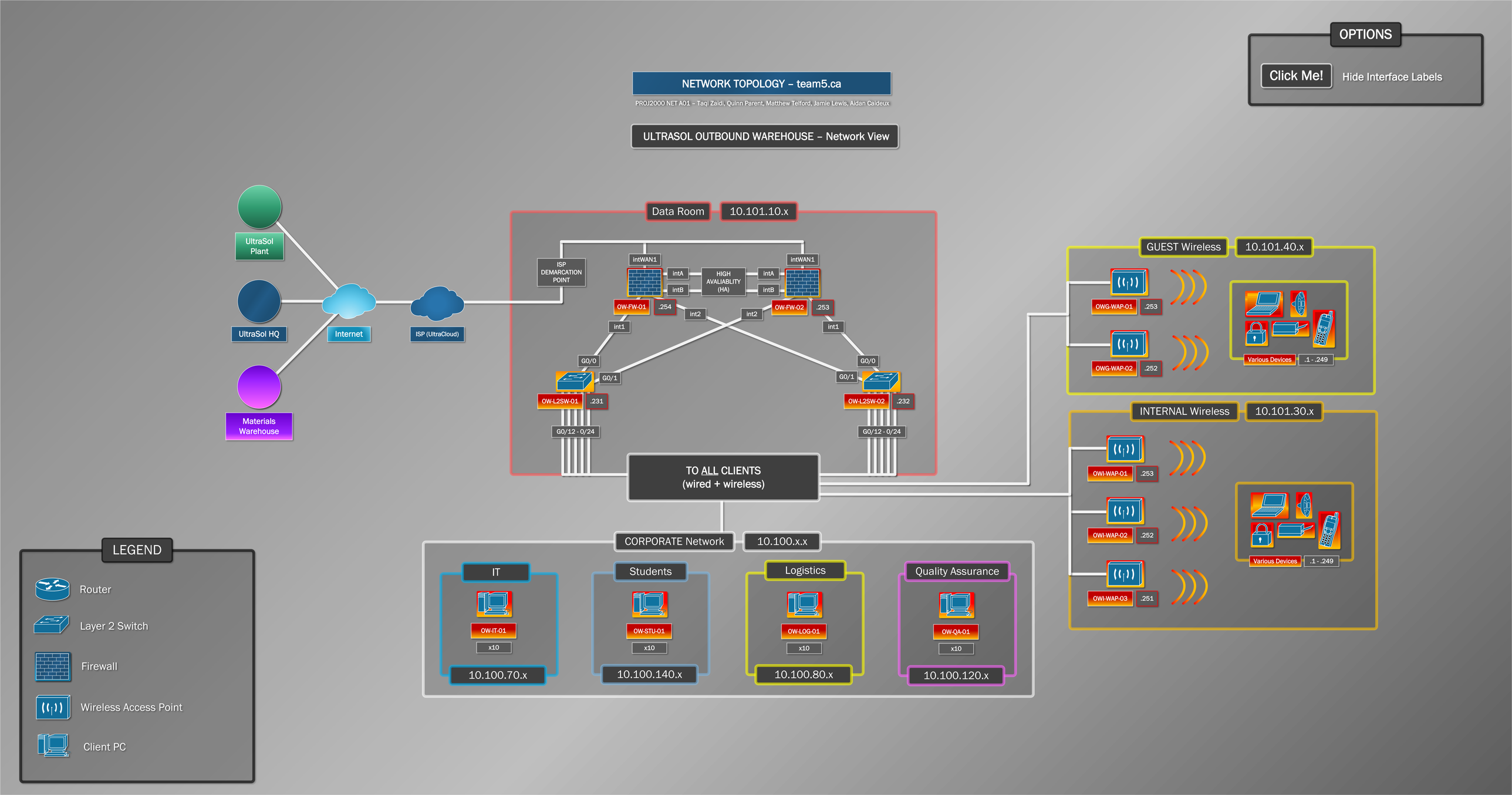

NETWORK TOPOLOGY – team5.ca

PROJ2000 NET A01 – Taqi Zaidi, Quinn Parent, Matthew Telford, Jamie Lewis, Aidan Caideux

OPTIONS

Click Me! Show Interface Labels

ULTRASOL MATERIALS WAREHOUSE – Network View

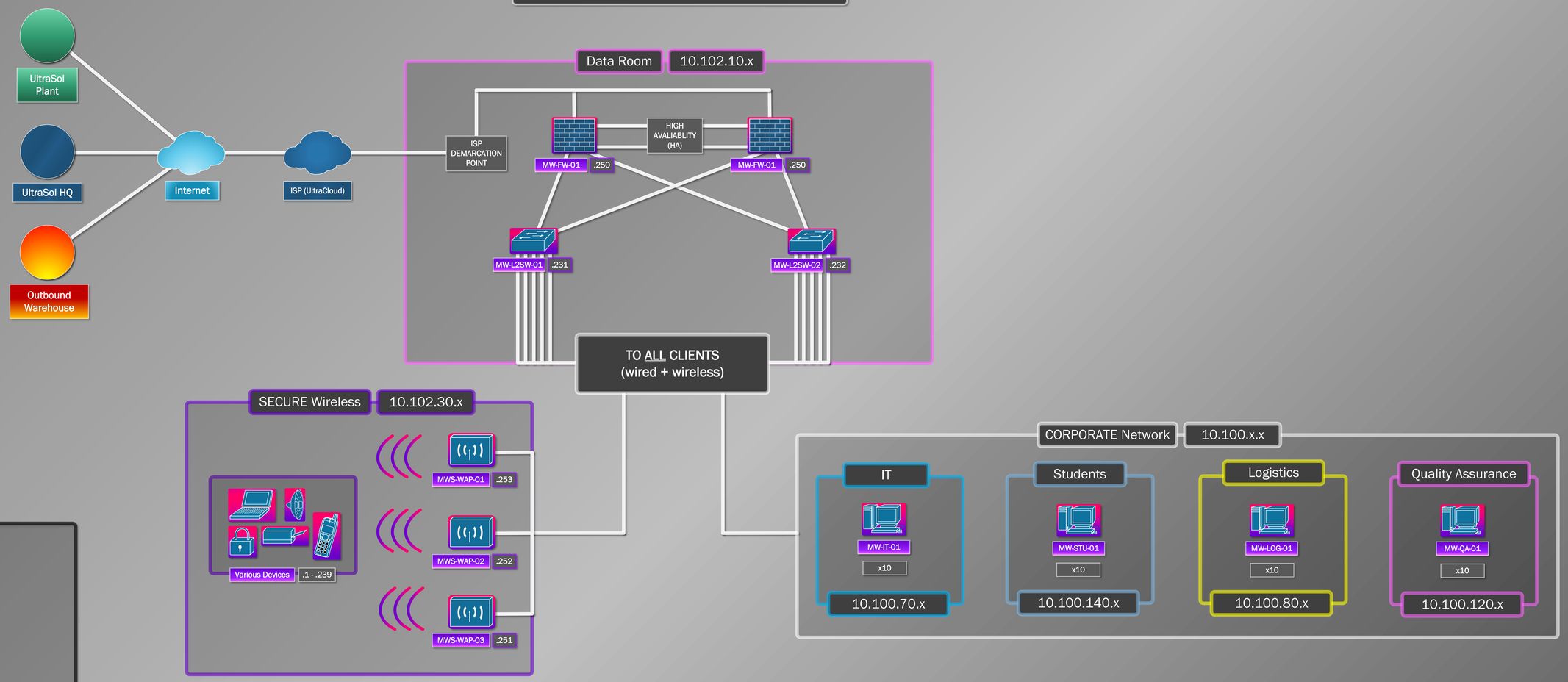

LEGEND

- Router
- Layer 2 Switch
- Firewall
- Wireless Access Point
- Client PC

NETWORK TOPOLOGY – team5.ca

PROJ2000 NET A01 – Taqi Zaidi, Quinn Parent, Matthew Telford, Jamie Lewis, Aidan Caideux

OPTIONS

Click Me! Hide Interface Labels

ULTRASOL MATERIALS WAREHOUSE – Network View

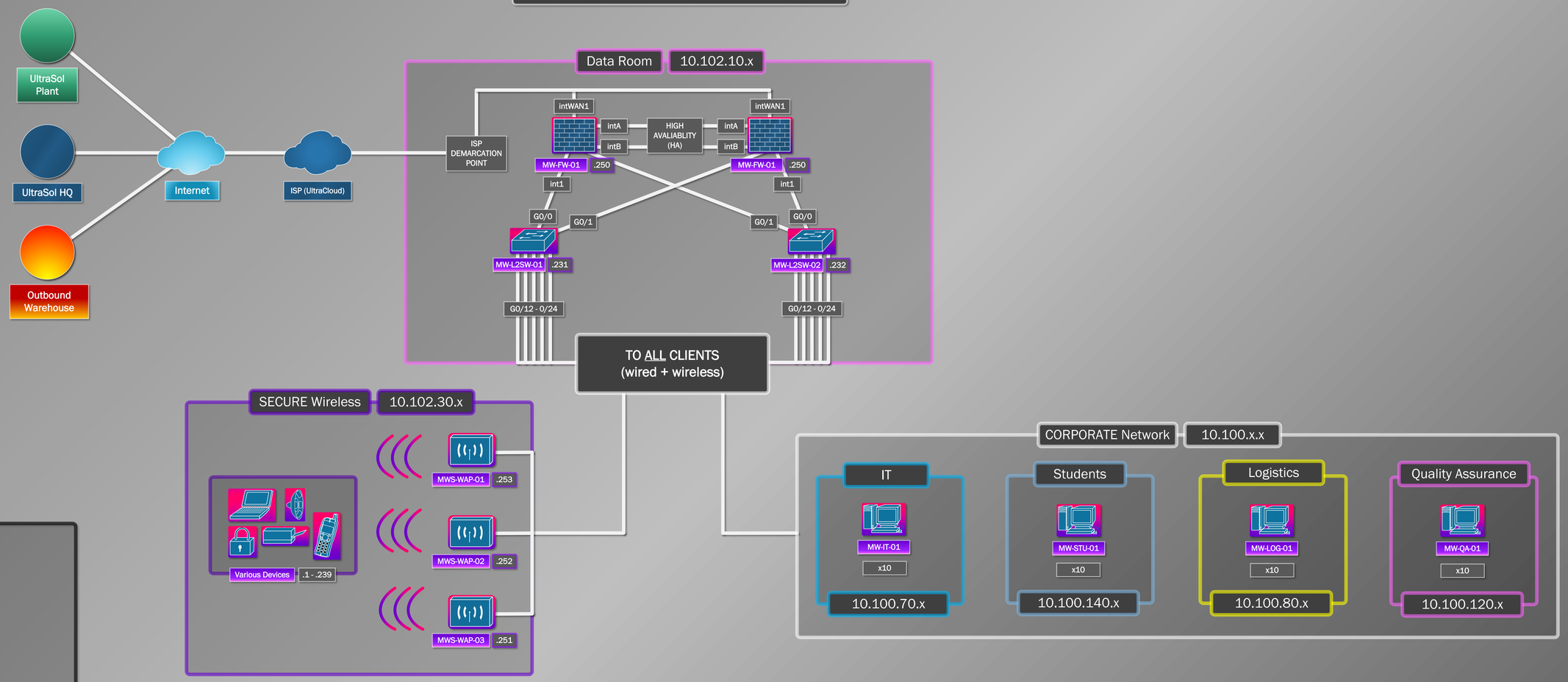

LEGEND

- Router
- Layer 2 Switch
- Firewall
- Wireless Access Point
- Client PC

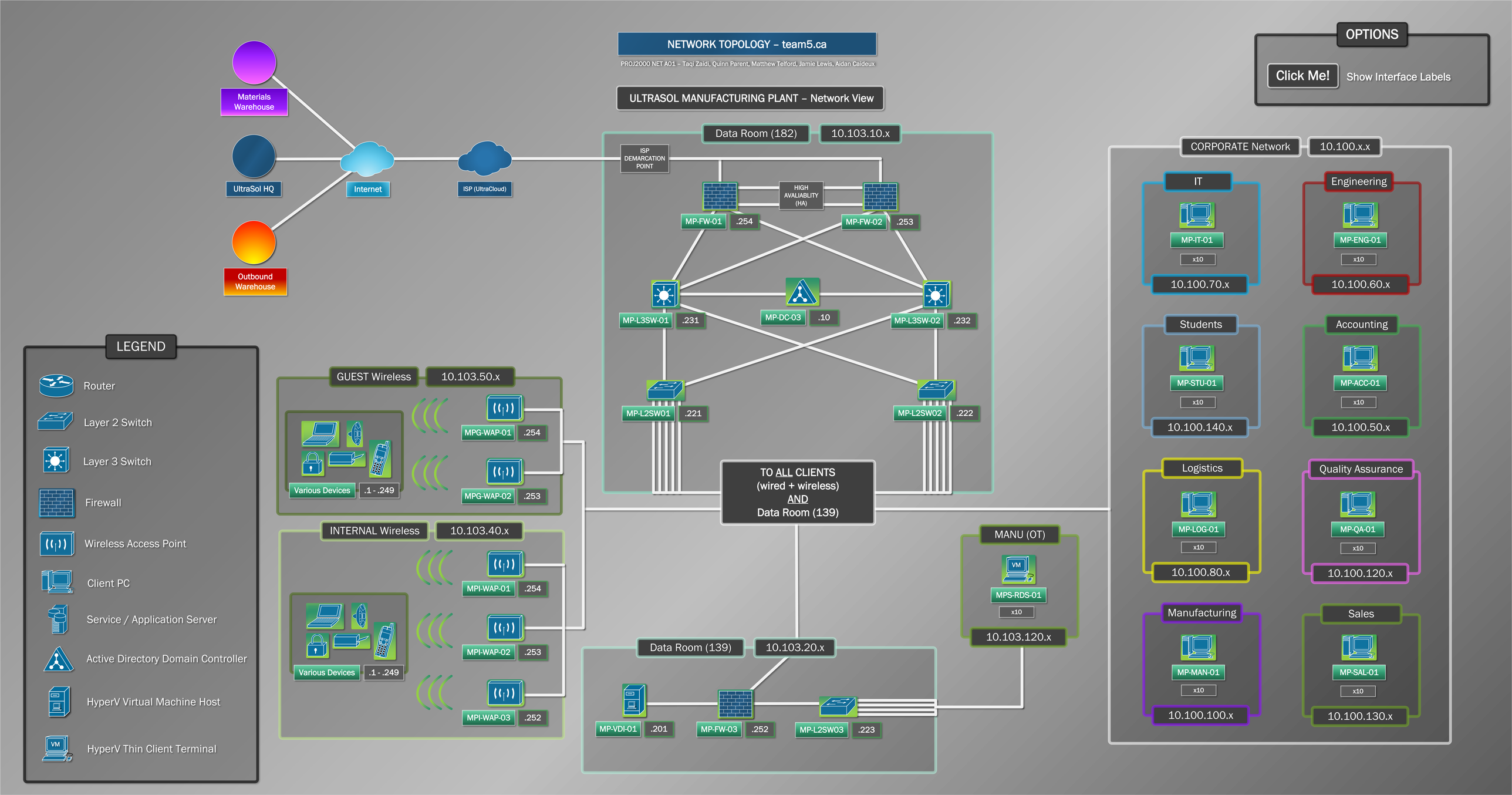
NETWORK TOPOLOGY – team5.ca
PROJ2000 NET A01 – Taqi Zaldi, Quinn Parent, Matthew Telford, Jamie Lewis, Aidan Caideux
ULTRASOL MANUFACTURING PLANT – Network View
OPTIONS
Click Me!
Show Interface Labels
Materials Warehouse
UltraSol HQ
Outbound Warehouse
Internet
ISP (UltraCloud)
Data Room (182)
10.103.10.x
ISP DEMARCATION POINT
HIGH AVALIABLITY (HA)
MP-FW-01
.254
MP-FW-02
.253
MP-L3SW-01
.231
MP-DC-03
.10
MP-L3SW-02
.232
MP-L2SW01
.221
MP-L2SW02
.222
GUEST Wireless
10.103.50.x
Various Devices
.1 - .249
MPG-WAP-01
.254
MPG-WAP-02
.253
INTERNAL Wireless
10.103.40.x
Various Devices
.1 - .249
MPI-WAP-01
.254
MPI-WAP-02
.253
MPI-WAP-03
.252
TO ALL CLIENTS
(wired + wireless)
AND
Data Room (139)
Data Room (139)
10.103.20.x
MP-VDI-01
.201
MP-FW-03
.252
MP-L2SW03
.223
MANU (OT)
VM
MPS-RDS-01
x10
10.103.120.x
CORPORATE Network
10.100.x.x
IT
MP-IT-01
x10
10.100.70.x
Engineering
MP-ENG-01
x10
10.100.60.x
Students
MP-STU-01
x10
10.100.140.x
Accounting
MP-ACC-01
x10
10.100.50.x
Logistics
MP-LOG-01
x10
10.100.80.x
Quality Assurance
MP-QA-01
x10
10.100.120.x
Manufacturing
MP-MAN-01
x10
10.100.100.x
Sales
MP-SAL-01
x10
10.100.130.x
LEGEND
Router
Layer 2 Switch
Layer 3 Switch
Firewall
Wireless Access Point
Client PC
Service / Application Server
Active Directory Domain Controller
HyperV Virtual Machine Host
HyperV Thin Client Terminal

NETWORK TOPOLOGY – team5.ca

PROJ2000 NET A01 – Taqi Zaidi, Quinn Parent, Matthew Telford, Jamie Lewis, Aidan Caideux

ULTRASOL MANUFACTURING PLANT – Network View

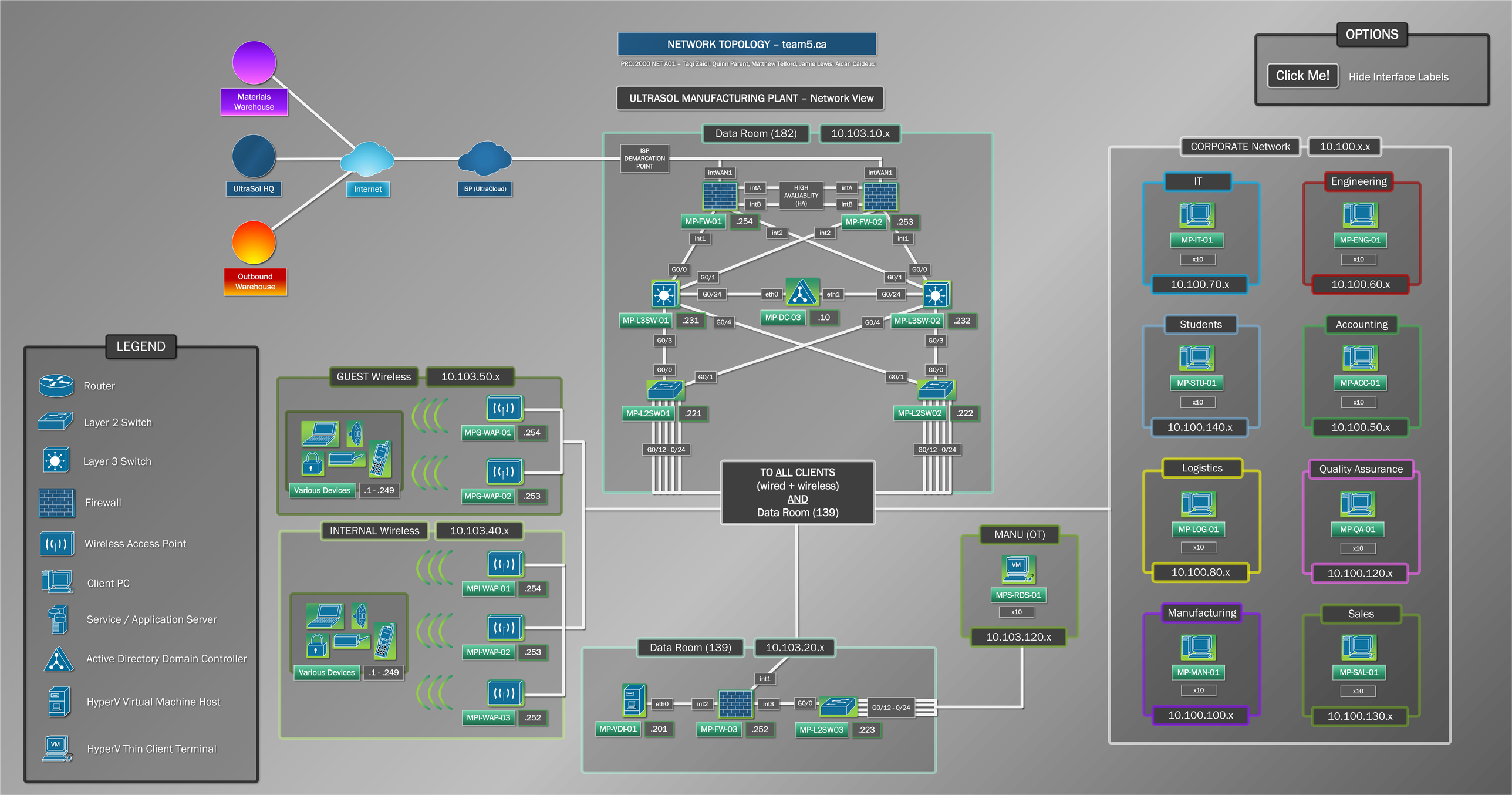

NETWORK TOPOLOGY – team5.ca

PROJ2000 NET A01 – Taqi Zaidi, Quinn Parent, Matthew Telford, Jamie Lewis, Aidan Caideux

(WIP) CLOUD SERVICES – Network View

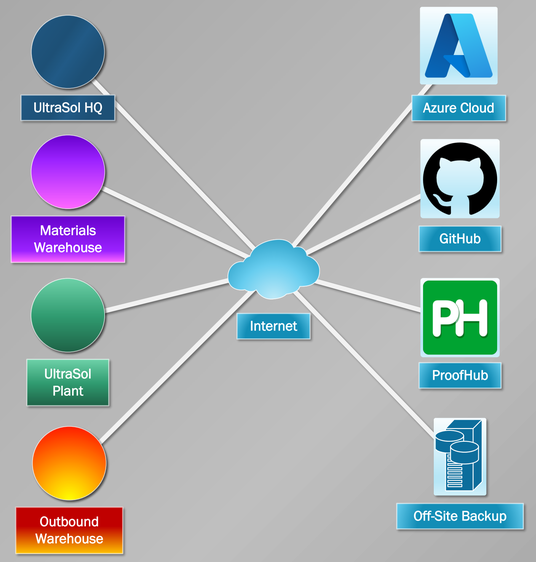

NETWORK TOPOLOGY – team5.ca

PROJ2000 NET A01 – Taqi Zaidi, Quinn Parent, Matthew Telford, Jamie Lewis, Aidan Caideux

Proof of Concept Wiring Overlook – PHYSICAL VIEW

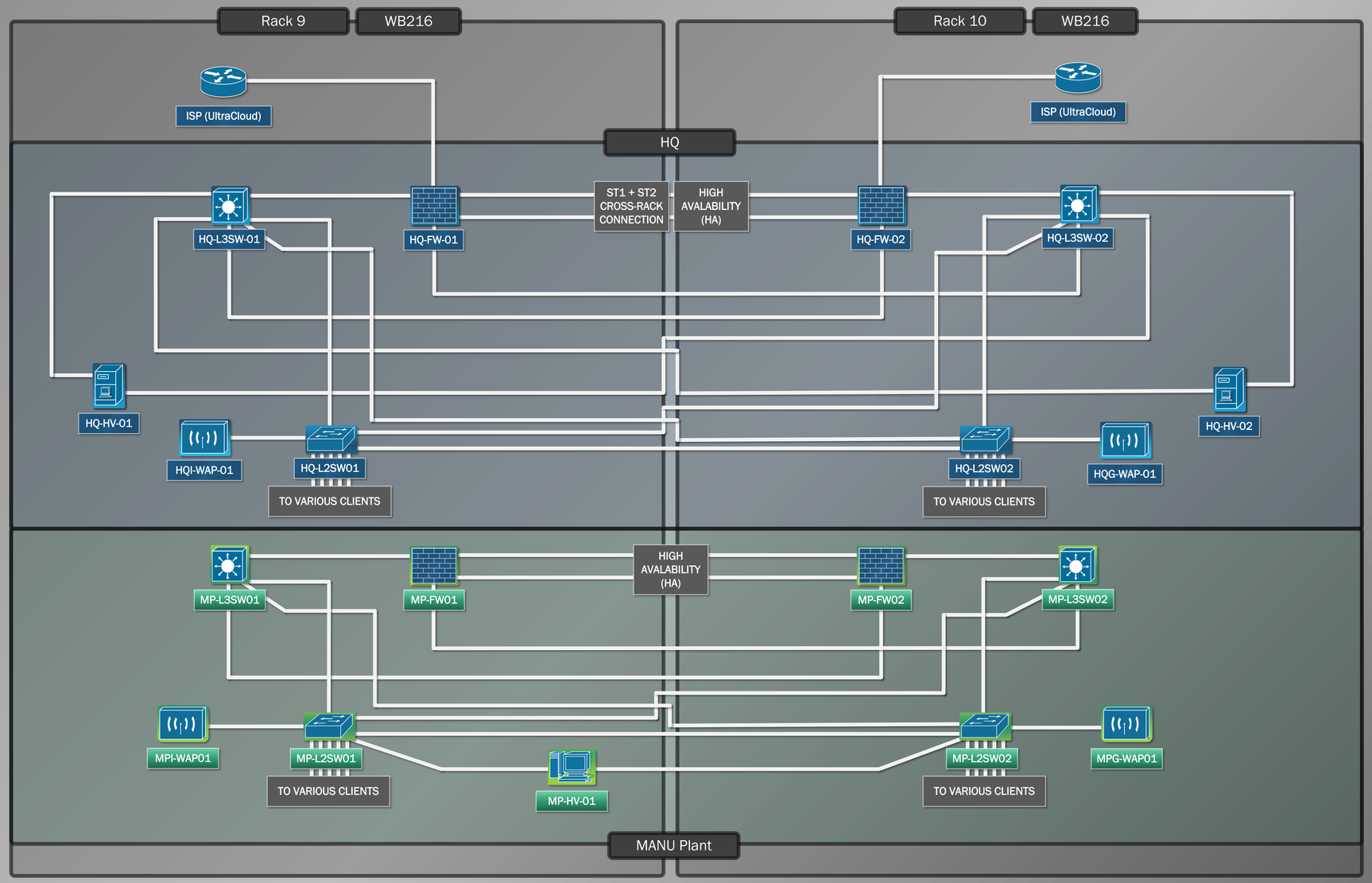

LEGEND

- Router
- Layer 2 Switch
- Layer 3 Switch
- Firewall
- Wireless Access Point
- Client PC
- Service / Application Server
- Active Directory Domain Controller
- HyperV Virtual Machine Host
- HyperV Thin Client Terminal

OPTIONS

Click Me! Show Interface Labels

NETWORK TOPOLOGY – team5.ca

PROJ2000 NET A01 – Taqi Zaidi, Quinn Parent, Matthew Telford, Jamie Lewis, Aidan Caideux

Proof of Concept Wiring Overlook – PHYSICAL VIEW

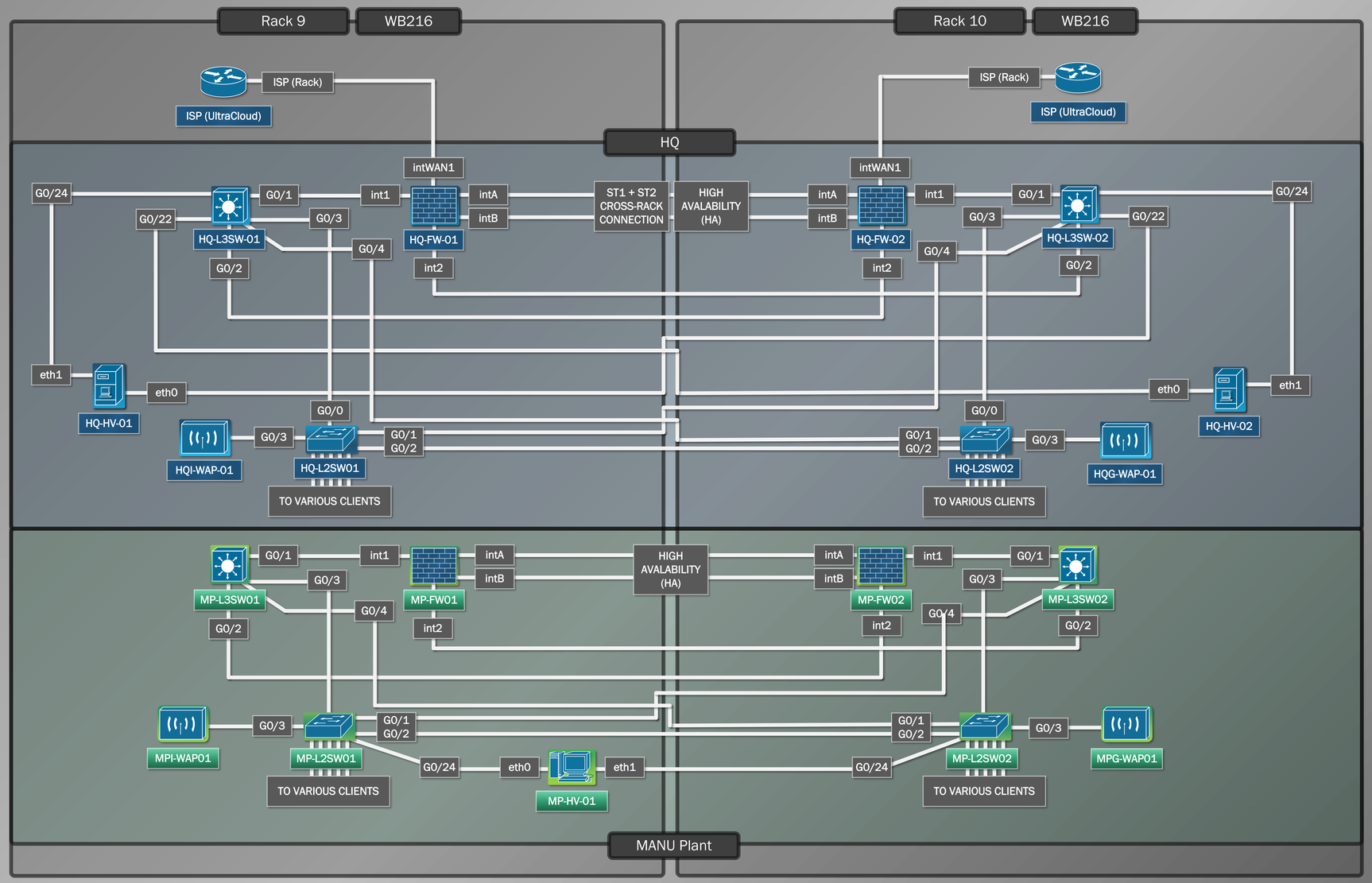

LEGEND

- Router
- Layer 2 Switch
- Layer 3 Switch
- Firewall
- Wireless Access Point
- Client PC
- Service / Application Server
- Active Directory Domain Controller
- HyperV Virtual Machine Host
- HyperV Thin Client Terminal

OPTIONS

Click Me! Hide Interface Labels