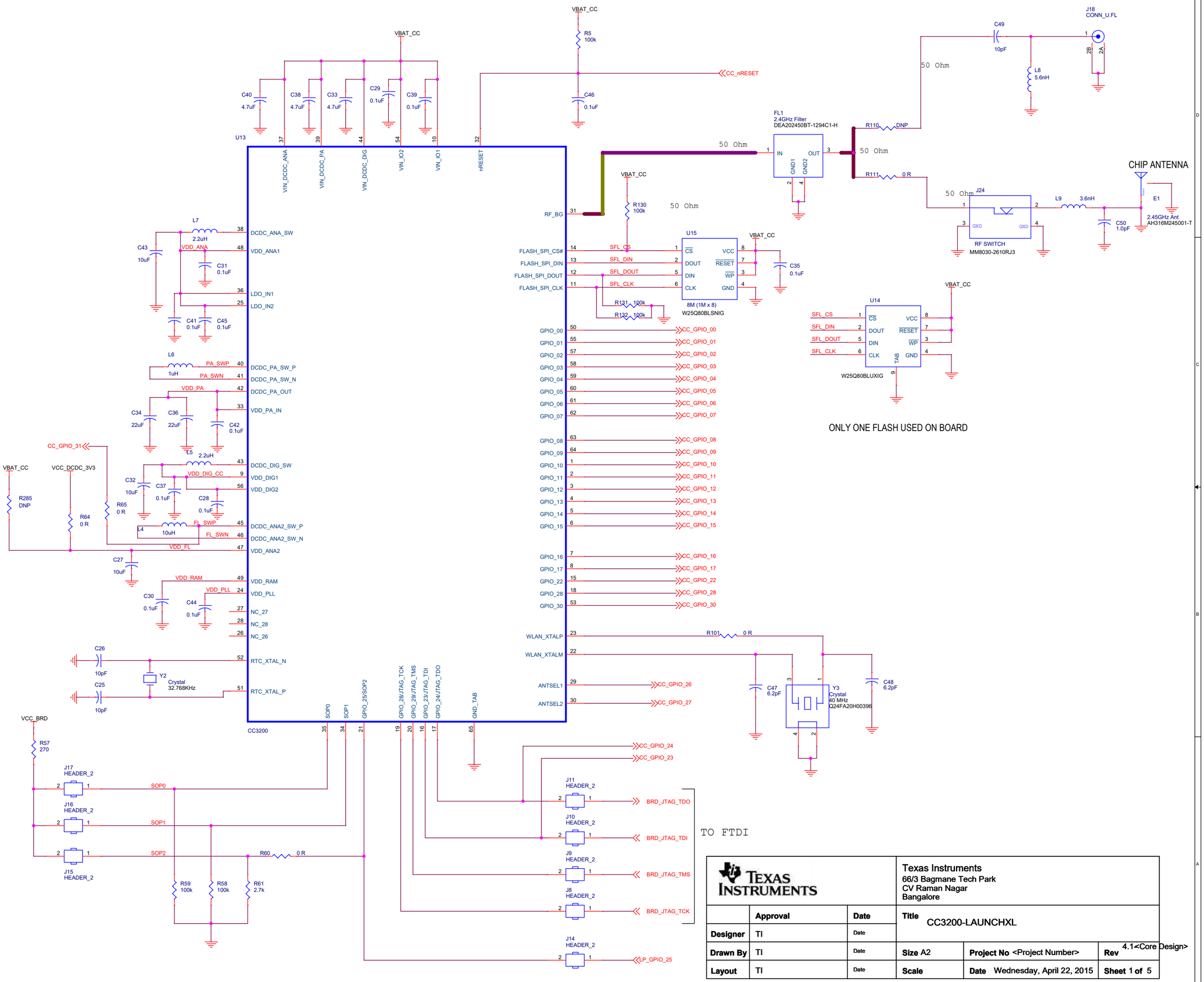
VBAT_CC
R5 100k
CC_nRESET
C46 0.1uF
C40 4.7uF
C38 4.7uF
C33 4.7uF
C29 0.1uF
C39 0.1uF
U13
CC3200
VIN_DCDC_ANA
VIN_DCDC_PA
VIN_DCDC_DIG
VIN_IO2
VIN_IO1
nRESET
RF_BG
DCDC_ANA_SW
VDD_ANA1
LDO_IN1
LDO_IN2
DCDC_PA_SW_P
DCDC_PA_SW_N
DCDC_PA_OUT
VDD_PA_IN
DCDC_DIG_SW
VDD_DIG1
VDD_DIG2
DCDC_ANA2_SW_P
DCDC_ANA2_SW_N
VDD_ANA2
VDD_RAM
VDD_PLL
NC_27
NC_28
NC_26
RTC_XTAL_N
RTC_XTAL_P
SOP0
SOP1
GPIO_25/SOP2
GPIO_28/JTAG_TCK
GPIO_29/JTAG_TMS
GPIO_23/JTAG_TDI
GPIO_24/JTAG_TDO
GND_TAB
GPIO_00
GPIO_01
GPIO_02
GPIO_03
GPIO_04
GPIO_05
GPIO_06
GPIO_07
GPIO_08
GPIO_09
GPIO_10
GPIO_11
GPIO_12
GPIO_13
GPIO_14
GPIO_15
GPIO_16
GPIO_17
GPIO_22
GPIO_28
GPIO_30
WLAN_XTALP
WLAN_XTALM
ANTSEL1
ANTSEL2
CC_GPIO_00
CC_GPIO_01
CC_GPIO_02
CC_GPIO_03
CC_GPIO_04
CC_GPIO_05
CC_GPIO_06
CC_GPIO_07
CC_GPIO_08
CC_GPIO_09
CC_GPIO_10
CC_GPIO_11
CC_GPIO_12
CC_GPIO_13
CC_GPIO_14
CC_GPIO_15
CC_GPIO_16
CC_GPIO_17
CC_GPIO_22
CC_GPIO_28
CC_GPIO_30
CC_GPIO_26
CC_GPIO_27
CC_GPIO_24
CC_GPIO_23
L7 2.2uH
C43 10uF
C31 0.1uF
C41 0.1uF
C45 0.1uF
L6 1uH
PA_SWP
PA_SWN
VDD_PA
C34 22uF
C36 22uF
C42 0.1uF
L5 2.2uH
VDD_DIG_CC
C32 10uF
C37 0.1uF
C28 0.1uF
L4 10uH
FL_SWP
FL_SWN
VDD_FL
C27 10uF
VDD_RAM
VDD_PLL
C30 0.1uF
C44 0.1uF
C26 10pF
C25 10pF
Y2 Crystal 32.768KHz
CC_GPIO_31
VCC_DCDC_3V3
R285 DNP
R64 0 R
R65 0 R
VCC_BRD
R57 270
J17 HEADER_2
J16 HEADER_2
J15 HEADER_2
SOP0
SOP1
SOP2
R60 0 R
R59 100k
R58 100k
R61 2.7k
R130 100k
R131 100k
R132 100k
U15
8M (1M x 8)
W25Q80BLSNIG
FLASH_SPI_CS#
FLASH_SPI_DIN
FLASH_SPI_DOUT
FLASH_SPI_CLK
SFL_CS
SFL_DIN
SFL_DOUT
SFL_CLK
C35 0.1uF
U14
W25Q80BLUXIG
ONLY ONE FLASH USED ON BOARD
FL1
2.4GHz Filter
DEA202450BT-1294C1-H
50 Ohm
R110 DNP
R111 0 R
C49 10pF
L8 5.6nH
J18 CONN_U.FL
J24
RF SWITCH
MM8030-2610RJ3
L9 3.6nH
C50 1.0pF
CHIP ANTENNA
E1
2.45GHz Ant
AH316M245001-T
R101 0 R
C47 6.2pF
C48 6.2pF
Y3 Crystal 40 MHz Q24FA20H00396
J11 HEADER_2
J10 HEADER_2
J9 HEADER_2
J8 HEADER_2
J14 HEADER_2
BRD_JTAG_TDO
BRD_JTAG_TDI
BRD_JTAG_TMS
BRD_JTAG_TCK
LP_GPIO_25
TO FTDI
Texas Instruments
66/3 Bagmane Tech Park
CV Raman Nagar
Bangalore
Approval
Date
Designer TI
Drawn By TI
Layout TI
Title CC3200-LAUNCHXL
Size A2
Project No <Project Number>
Rev 4.1<Core Design>
Scale
Date Wednesday, April 22, 2015
Sheet 1 of 5