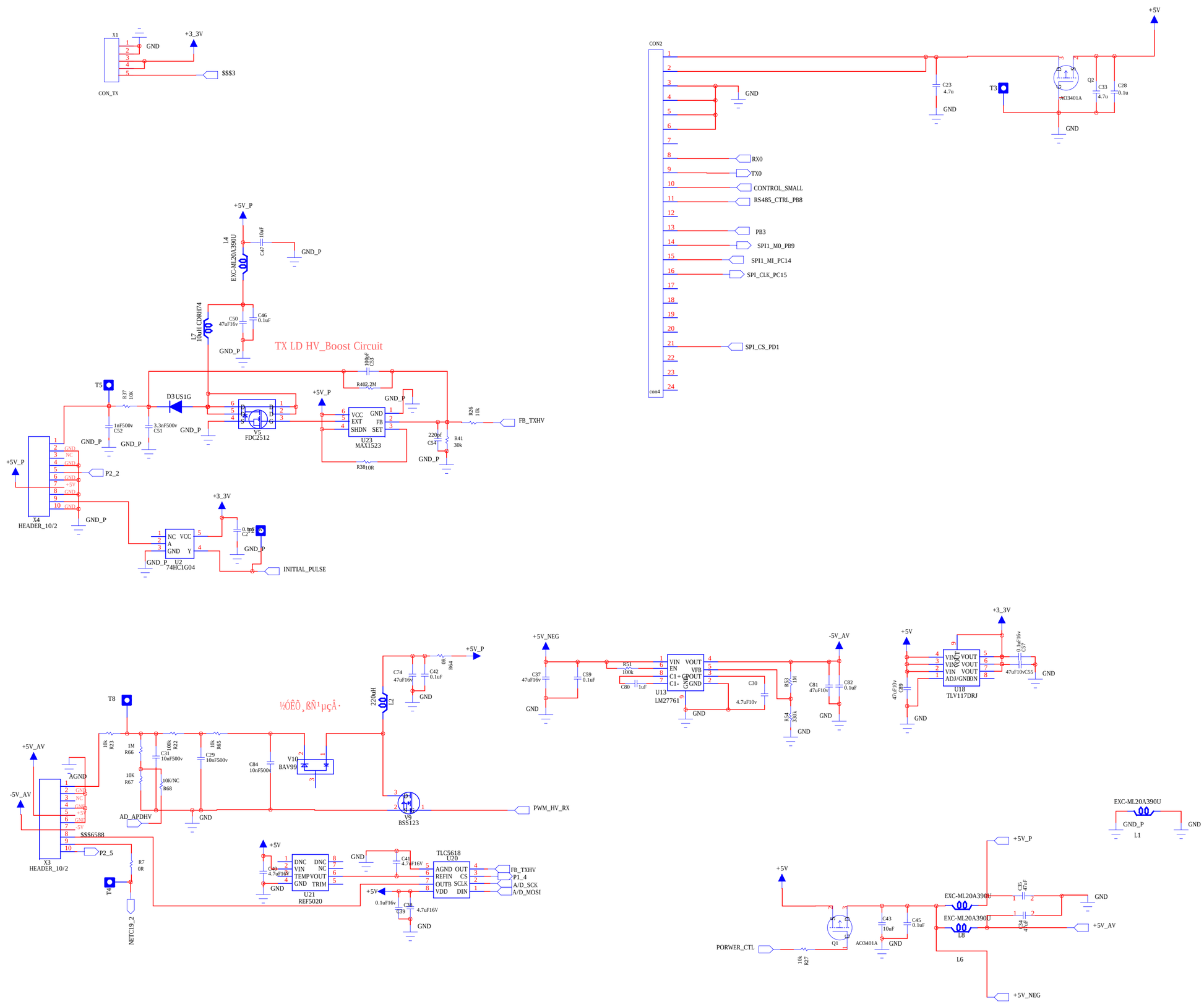
X1
CON_TX
GND
+3_3V
$$$3
CON2
con4
+5V
C23
4.7u
T3
Q2
AO3401A
C33
4.7u
C28
0.1u
RX0
TX0
CONTROL_SMALL
RS485_CTRL_PB8
PB3
SPI1_M0_PB9
SPI1_MI_PC14
SPI_CLK_PC15
SPI_CS_PD1
+5V_P
L4
EXC-ML20A390U
C47
10uF
GND_P
L7
10uH CDRH74
C50
47uF16v
C46
0.1uF
TX LD HV_Boost Circuit
C53
100pF
R40 2.2M
T5
R37
10K
D3 US1G
V5
FDC2512
1nF500v
C52
3.3nF500v
C51
VCC
EXT
SHDN
GND
FB
SET
U23
MAX1523
R38 10R
220pf
C54
R41
30k
R26
10k
FB_TXHV
X4
HEADER_10/2
P2_2
+3_3V
NC
VCC
A
GND
Y
U2
74HC1G04
C2
0.1uF
T2
INITIAL_PULSE
+5V_NEG
C37
47uF16v
C59
0.1uF
R51
100k
C80
1uF
VIN
EN
C1+
C1-
VOUT
VFB
U13
LM27761
C30
4.7uF10v
R53
1M
R54
330k
-5V_AV
C81
47uF10v
C82
0.1uF
U18
TLV117DRJ
ADJ/GND
C57
0.1uF16v
C55
47uF10v
C58
47uF10v
C74
47uF16v
C42
0.1uF
R64
10k
220uH
L2
T8
½ÓÊÕ¸ßÑ¹µçÂ·
R23
10k
R66
1M
R22
100k
C31
10nF500v
R65
10k
C29
10nF500v
C84
10nF500v
V10
BAV99
R67
10K
R68
10K/NC
AD_APDHV
V9
BSS123
PWM_HV_RX
X3
HEADER_10/2
P2_5
R7
0R
T4
NETC19_2
C40
4.7uF16V
U21
REF5020
DNC
VIN
TEMP
GND
VOUT
TRIM
C41
4.7uF16V
TLC5618
U20
AGND
REFIN
OUTB
VDD
OUT
CS
SCLK
DIN
FB_TXHV
P1_4
A/D_SCK
A/D_MOSI
C38
0.1uF16v
C39
4.7uF16V
EXC-ML20A390U
L1
PORWER_CTL
R27
10k
Q1
AO3401A
C43
10uF
C45
0.1uF
C35
47uF
C34
47uF
L8
L6
+5V_AV
+5V_NEG

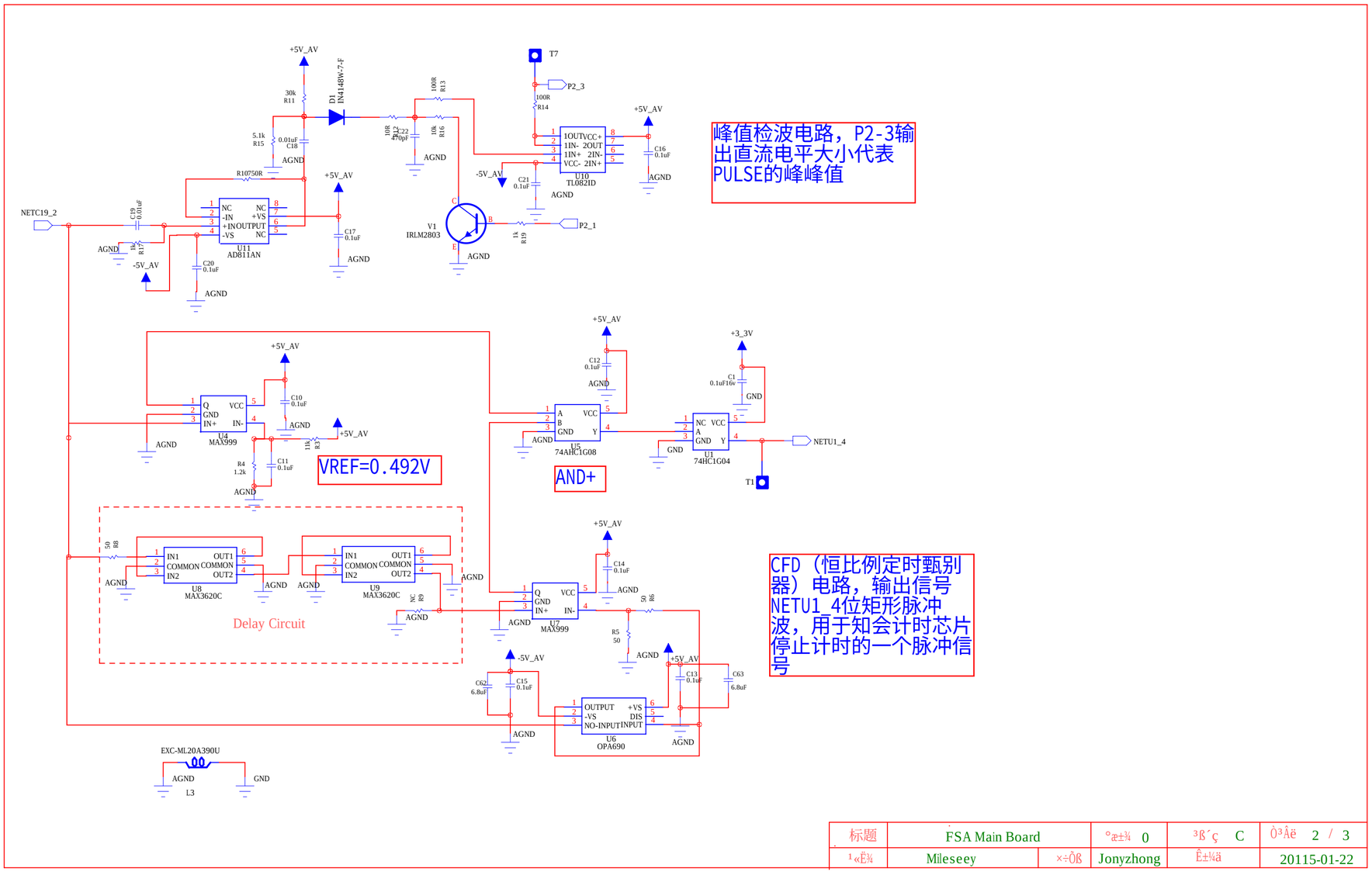

标题	FSA Main Board	°æ±¾ 0	³ß´ç C	Ò³Âë 2 / 3
¹«Ë¾	Mileseey	×÷ÔÒß Jonyzhong	Ê±¼ä	20115-01-22

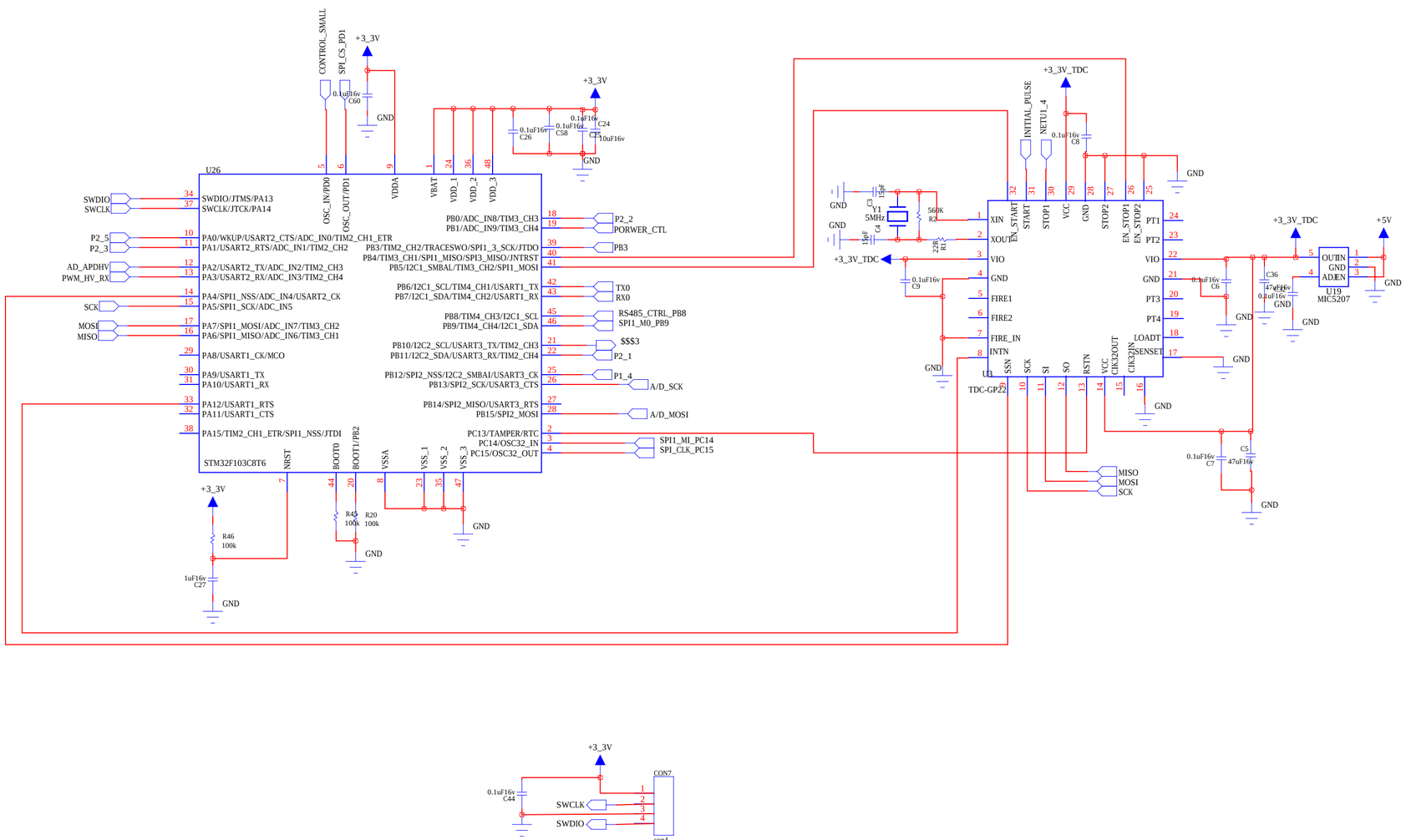

标题	FSA Main Board	°æ±¾ 0	³ß´ç C	Ò³Âë 3 / 3
¹«Ë¾	Mileseey	×÷Ôß Jonyzhong	Ê±¼ä	20115-01-22