Concept Review

Pendulum Free-Body Diagram

Why Use a Pendulum Free Body Diagram?

Understanding pendulum free-body diagram and moment of inertia in a rotary pendulum system is crucial for developing accurate models in control engineering. These models help to learn the fundamental principles of dynamics and control, using systems like the QUBE-Servo 3 rotary pendulum. Accurate interfacing ensures that the model's conventions align with the hardware, allowing for predictable responses to control inputs. The moment of inertia, a key property that influences how the pendulum responds to external forces, directly affects system stability and control.

1. Pendulum Interfacing

The rotary pendulum system, commonly known as the Furuta Pendulum, is a widely studied model in physics and engineering. It provides a practical example for understanding concepts of rotational dynamics, modeling, and control. The convention used for the modeling of the Qube–Servo 3 rotary pendulum is shown in Figure 1.

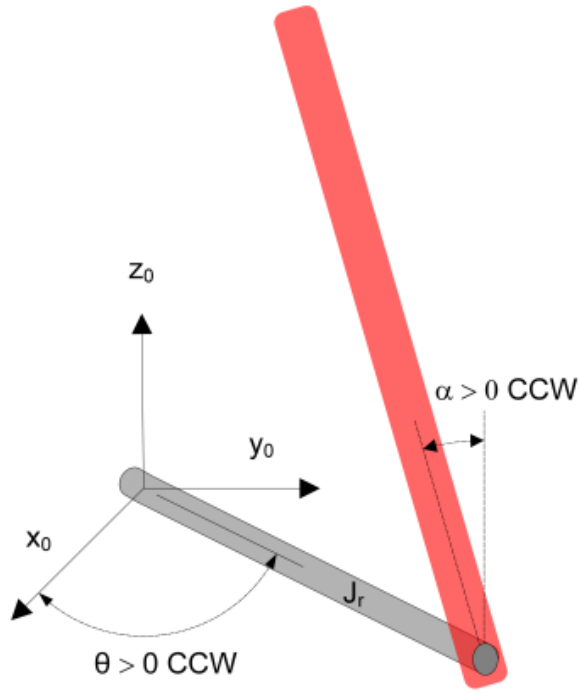

Figure 1. Model conventions of rotary pendulum

In this system, the rotary arm, connected to the motor's pivot point, is denoted by the angle variable θ, while the pendulum angle, attached to the end of the rotary arm, is represented by the angle α.

Note the following conventions for clarity and consistency:

- The angle α is defined as the *inverted pendulum angle*, i.e. the angle with respect to the upright vertical position where α = 0 means the pendulum is perfectly upright. It is expressed mathematically using:

$$\alpha = \alpha_{\text{full}} \bmod 2\pi - \pi \qquad 1.1$$

  where α_{full} represents the continuous measurement of the pendulum's angle from the encoder, with zero corresponding to the downward vertical position.

- Both θ and α angles are defined as positive when rotated counterclockwise (CCW).
- A positive voltage applied to the motor causes the rotary arm to move in the positive CCW direction.

These conventions were introduced in earlier hardware interfacing experiments with the DC motor and encoders on the Qube-Servo 3, which also measure the pendulum angle. Maintaining these conventions in both the model and hardware interactions is essential to achieve accurate control and stability in the rotary pendulum system.

2. Free-Body Diagram

The free-body diagram of a pendulum provides the foundation for deriving its equation of motion. By analyzing the forces acting on the pendulum, we can develop a model that accurately represents its dynamics and understand how parameters like mass and moment of inertia influence its motion.

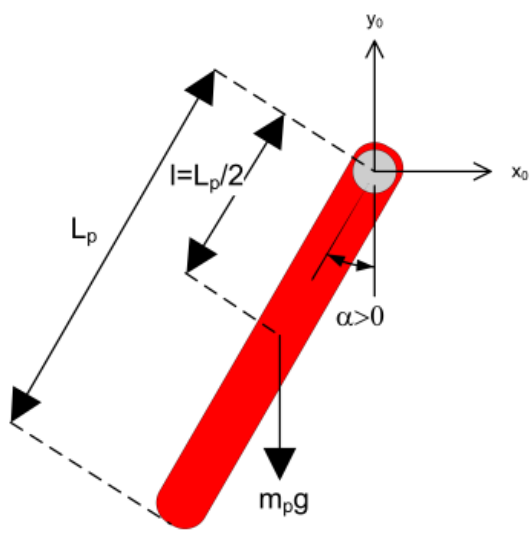

Figure 2. Free-body diagram of pendulum

Equation of Motion

From the free-body diagram in Figure 2, the resulting nonlinear equation of motion of the pendulum is given by:

$$J_p\ddot{\alpha}(t) = m_p g l \sin\big(\alpha(t)\big) \qquad 2.1$$

where:

- J_p is the moment of inertia of the pendulum about the pivot axis,
- m_p is the mass of the pendulum,
- L_p is the length of the pendulum from the pivot to the end, and
- $l = \frac{L_p}{2}$ represents the distance between the pivot and the center of mass.

Linearized Equation for Experimental Determination of Moment of Inertia

The moment of inertia J_p can be found experimentally by assuming the pendulum is not actuated. Linearizing Equation (2.1) and solving for the differential equation yields:

$$J_p = \frac{m_p g l}{(2\pi f)^2} \tag{2.2}$$

where f is the measured natural frequency of the pendulum with the rotary arm held rigid. The frequency f can be calculated as:

$$f = \frac{n_{\text{cyc}}}{\Delta t} \tag{2.3}$$

where:

- n_{cyc} is the number of oscillation cycles, and
- Δt is the total duration of these cycles.

Alternative Calculation of Moment of Inertia

Alternatively, J_p can be calculated using the moment of inertia expression:

$$f = \frac{n_{\text{cyc}}}{\Delta t} \tag{2.4}$$

where r is the perpendicular distance between the infinitesimal mass element dm and the axis of rotation. This approach provides a theoretical value of the moment of inertia based on the geometry and mass distribution of the pendulum.

3. Energy Control

For the purpose of lifting the pendulum into an upright position automatically to then keep it balanced, an energy-based controller can be developed that will calculate the acceleration (i.e. motor volage) necessary to swing the pendulum up to the inverted position.

In theory, if the arm angle is kept constant and the pendulum is given an initial perturbation, the pendulum will keep on swinging with constant amplitude. This is due to the conservation of energy - the sum of the pendulum's kinetic energy (from movement) and potential energy (from its position relative to the pivot point) remains constant. However, in real-world scenarios, there is always some amount of friction that causes the pendulum's oscillations to slowly die out over time, causing the overall energy of the system to decrease.

To counteract this energy loss and keep the pendulum swinging, we can apply an external force, in this case from the motor attached to the pivot point. By carefully controlling the timing and magnitude of this force, we can add energy back into the system and maintain a constant swing amplitude or increase it to be able to swing up the pendulum.

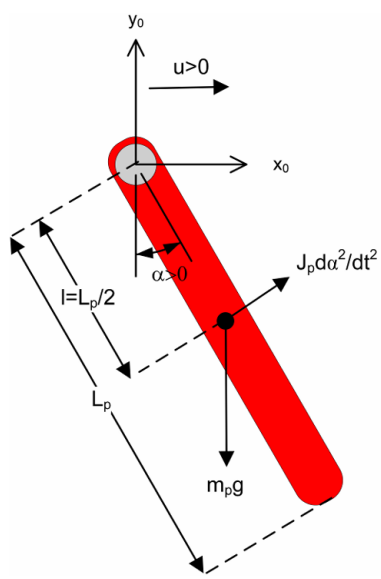

Figure 3. Free-body diagram of pendulum considering acceleration at pivot

The nonlinear equation of motion of a single pendulum, as shown in Figure 3 is:

$$J_p\ddot{\alpha}(t) + m_p g l \ \sin\alpha(t) + m_p l u(t)\cos\alpha(t) = 0 \qquad 3.1$$

Where:

- J_p is the moment of inertia with respect to the pivot point
- $\alpha(t)$ is the angle of the pendulum defined as positive when rotated counterclockwise
- $\ddot{\alpha}(t)$ is the angular acceleration of the pendulum
- m_p is the mass of the pendulum
- g is gravity
- l is the distance between the pivot and the center of mass

- $u(t)$ is the *linear acceleration of the pendulum pivot* (positive along the x_0 axis)

The potential energy of the pendulum is:

$$E_p(t) = m_p g l(1 - \cos\alpha) \tag{3.2}$$

The kinetic energy is

$$E_k = \frac{1}{2} J_p \dot{\alpha}^2 \tag{3.3}$$

Note that the moment of inertia used to define the pendulum kinetic energy is with respect to its center of mass.

The potential energy is zero when the pendulum is at rest at $\alpha = 0$; and equals $E_p = 2m_p g l$ when the pendulum is upright at $\alpha = \pm\pi$. The sum of the potential and kinetic energy of the pendulum is

$$\mathrm{E} = \frac{1}{2} J_p \dot{\alpha}^2 + m_p g l(1 - \cos\alpha) \tag{3.4}$$

Differentiating equation 3.4 yields

$$\dot{E} = \frac{dE}{dt} = J_p \ddot{\alpha}\dot{\alpha} + m_p g l \sin\dot{\alpha}\alpha \tag{3.5}$$

Solving for $J_p \ddot{\alpha}(t)$ in equation 3.1 gives

$$J_p \ddot{\alpha} = -m_p g l \sin\alpha - m_p u l \cos\alpha \tag{3.6}$$

And substituting this in equation 3.5 becomes

$$\begin{gathered} \dot{E} = (-m_p g l \sin\alpha - m_p u l \cos\alpha)\dot{\alpha} + m_p g l \sin\alpha\dot{\alpha} \\ \dot{E} = -m_p u l \cos\alpha\, \dot{\alpha} \end{gathered} \tag{3.7}$$

Since the acceleration of the pivot is proportional to the current driving the arm motor and thus also proportional to the motor voltage, it is possible to control the energy of the pendulum with the proportional control law

$$u = (E - E_r)\dot{\alpha}\cos\alpha \tag{3.8}$$

This control law will drive the energy of the pendulum towards the reference energy, i.e. $E(t) \rightarrow Er$. By setting the reference energy to the pendulum potential energy, $Er = Ep$, the control law will swing the link to its upright position. Notice that the control law is nonlinear because it includes nonlinear terms (e.g. $\cos\alpha$). Further, the control changes sign when $\dot{\alpha}$ changes sign and when the angle is ± 90 degrees.

For the system energy to change quickly, the magnitude of the control signal must be large. As a result, the swing up controller is implemented as

$$u = sat_{umax}\big(k_e(E - E_r)\text{sign}(\dot{\alpha}\cos\alpha)\big) \qquad 3.9$$

Where:

- k_e is a tunable control gain
- sat_{umax} is a function to saturate the control signal at the maximum acceleration of the pendulum pivot u_{max}
- sign$(\dot{\alpha}\cos\alpha)$ is an expression used to enable faster control switching

The control law in equation 3.9 finds the linear acceleration needed to swing up the pendulum. Because the control variable in the Qube-Servo is motor voltage, $v_m(t)$, the acceleration needs to be converted into voltage. This can be done using the expression

$$v_m(t) = \frac{R_m r m_r}{k_t} u(t) \qquad 3.10$$

Where:

- R_m is the motor resistance
- k_t is the current-torque constant of the motor
- r is the length of the rotary arm
- m_r is the mass of the rotary arm.

The block diagram of this swing-up nonlinear control is shown in Figure 4.

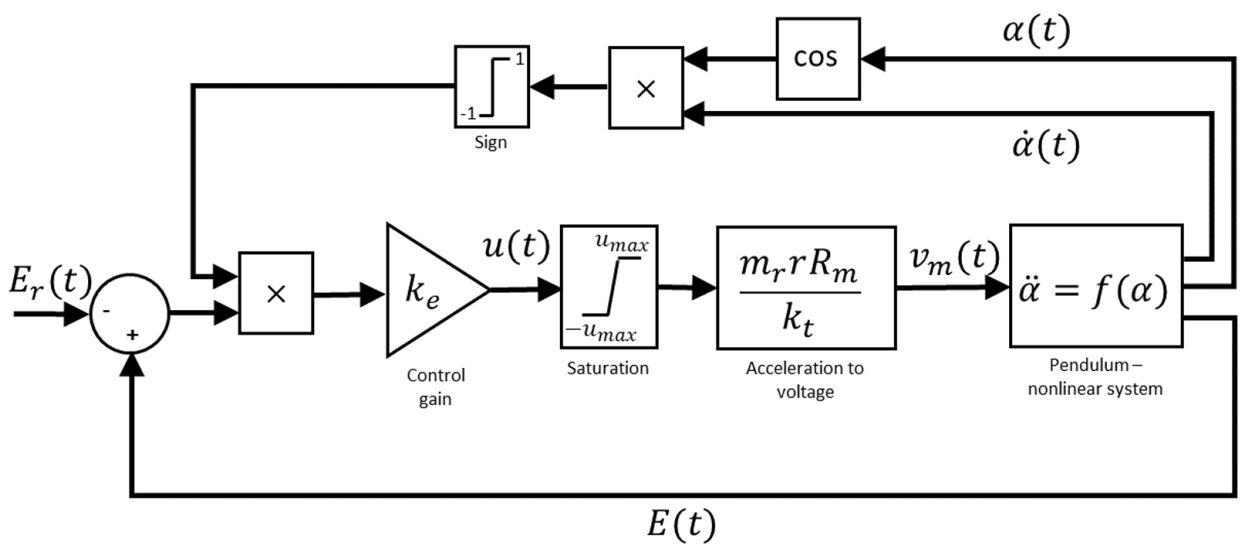

Figure 4. Energy swing-up control of the pendulum.

© Quanser Inc., All rights reserved.

QUANSER
INNOVATE · EDUCATE

Solutions for teaching and research. Made in Canada.