QUANSER
INNOVATE·EDUCATE

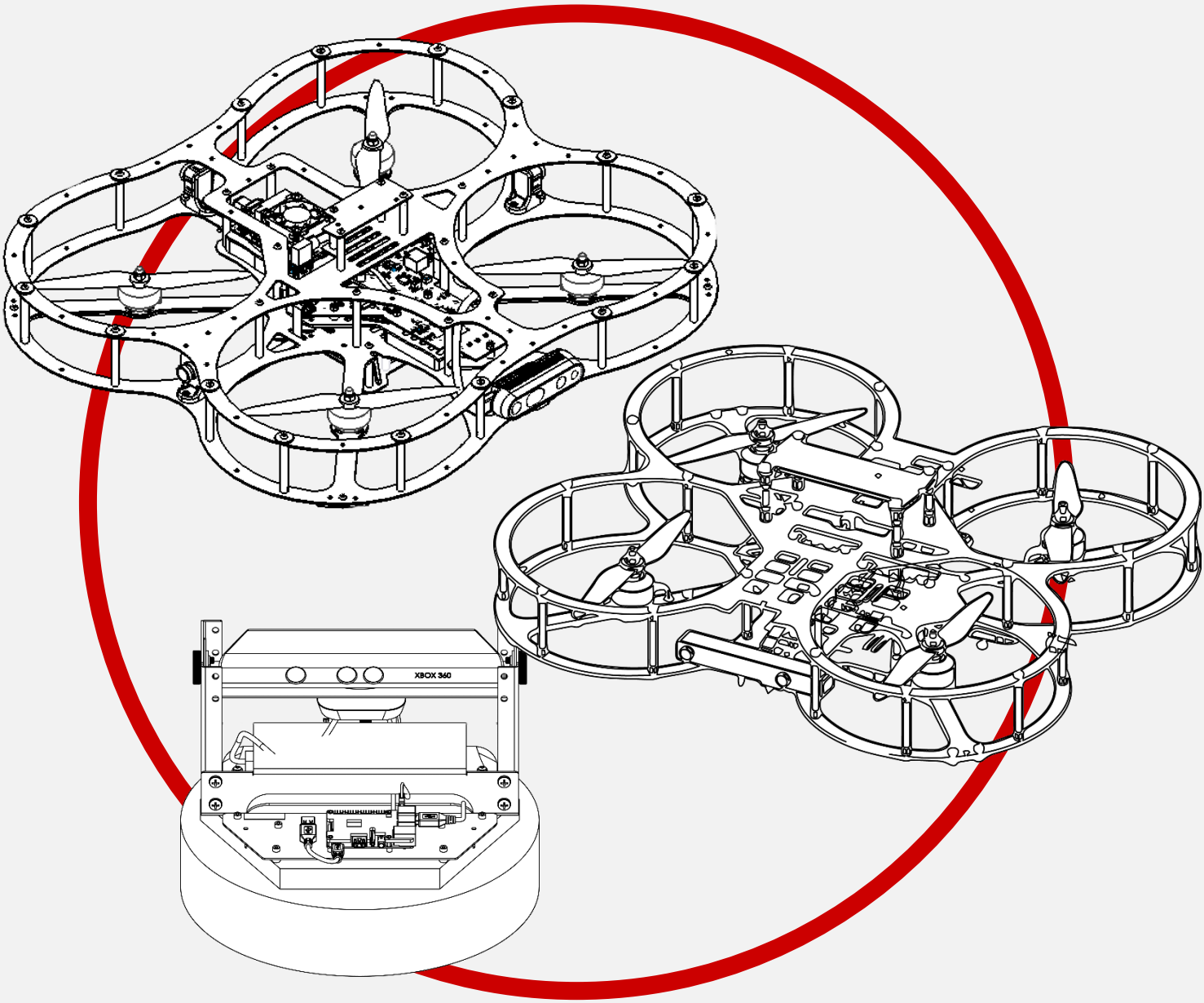

Autonomous Vehicles Research Studio

Setup Guide – Calibrating Optitrack Cameras

v 2.0 – 18*th April* 2023

Table of Contents

A. Calibrating Optitrack Cameras 2

i. Calibrating Camera Group 3

ii. Calibrating the Ground Plane 6

B. Research Studio Frame vs Motive Frame 7

C. Checkpoint – Captured Volume Screenshot 7

A. Calibrating Optitrack Cameras

Once the cameras are set up and oriented (you have followed the instructions in step 3 – camera mounting and step 9 – camera orientation), the cameras are ready for calibration.

The calibration process involves two steps, calibrating the camera group and calibrating the ground plane.

1. Camera group: calibrating this will determine the relative position of the cameras. This step uses the calibration wand (Figure 1a). The Motive software compares and cross-references the marker positions observed by multiple cameras to calculate their relative location to each other.

2. Ground plane: determines where the camera group is located relative to the ground This step uses the ground calibration square (Figure 1b). Motive uses the marker positions of the ground calibration square as observed by the camera group to calculate their location relative to the ground.

a. Calibration wand (CW - 500)

b. Calibration ground square (CS - 200)

Figure 1: Optitrack calibration tools (Note that the CW-500 wand will require assembly using the A slots)

i. Calibrating Camera Group

1. Open Motive. Under the Devices pane, ensure that Motive can detect all Flex 13 cameras (Figure 2) Make sure all cameras are in tracking mode.

Note: If you do not see any/all cameras, ensure that all USB cables are properly connected and retry

Important: Leave Motive open for approximately 15-30 minutes to allow the cameras to warm up completely prior to performing calibration.

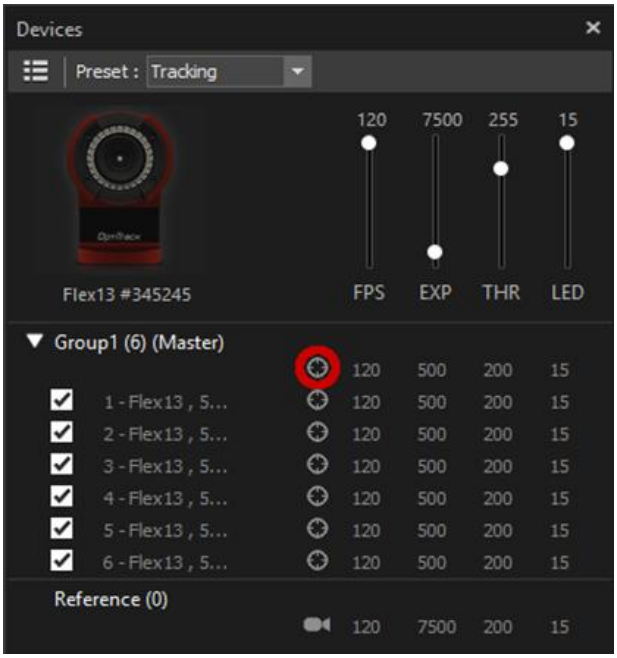

Figure 2. Devices pane in Motive: detecting cameras

2. Remove all markers from the view of the cameras. Sharp light from reflective surfaces should be blocked (painter's tape is a great option for this) or the sources relocated, as these are false positives in terms of marker recognition and can hinder with rigid body identification later.

Note: If you cannot remove certain reflective surfaces, please take a screenshot of the view and reflective surface, and contact Quanser technical support (tech@quanser.com) for help.

3. Under Camera Calibration > Calibration > Wanding pane, select the '*CW-500 (500mm)* wand, and ensure that the calibration type is set to '*Full*' (Figure 3). Click '*Start Wanding*' and move the wand around in the workspace. Try to move the wand in a way that the generated point cloud fills most of the frame for each camera (Figure 4a).

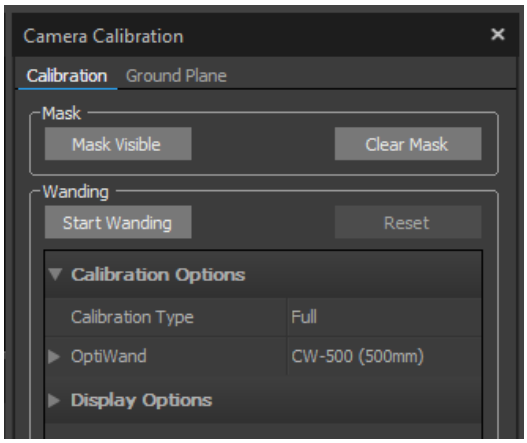

Figure 3. Wanding in Motive 2.0.1

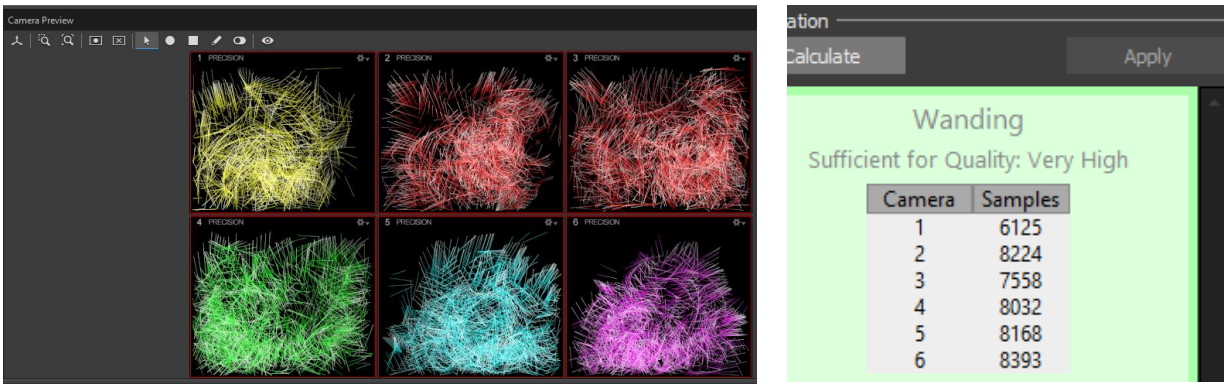

a. Marker point cloud

b. Sample points used

Figure 4: Point cloud generation using markers in Motive 2.0.1

4. The markers detected by the cameras will generate a point cloud (Figure 4a). For proper calibration, keep moving the wand within the workspace until each camera registers approximately 6000-8000 sample points (Figure 4b). When complete, click 'Calculate' (top left in figure 4b) under the Camera Calibration > Calibration > Calibration pane.

Note: Empty regions in a particular camera's point cloud are locations where the other cameras could not see the wand during calibration. This indicates an opportunity to further optimize the workspace by re-orienting cameras. For more information, contact Quanser technical support (tech@quanser.com).

5. After a brief moment, a prompt with the calibration results will be displayed (Figure 5). **If the result is not 'Very High' or 'Exceptional', it is recommended to repeat the calibration process with more sample points.**

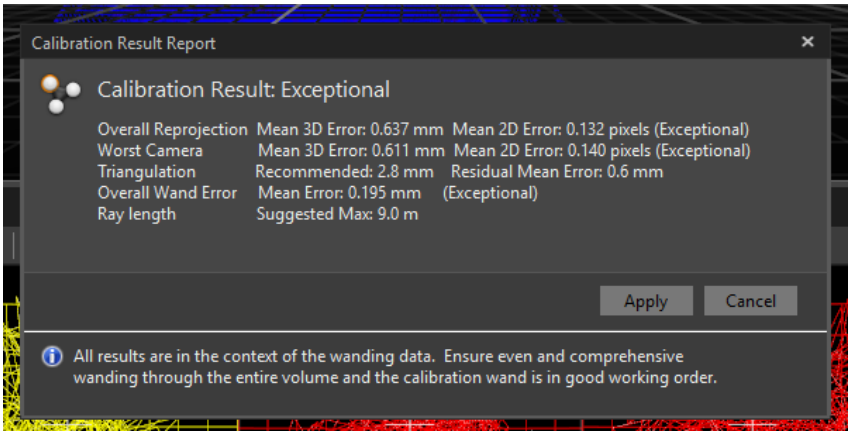

Figure 5: Calibration result (Motive 2.0.1)

ii. Calibrating the Ground Plane

1. Place the CS - 200 ground square inside the workspace as shown in Figure 6a. The marker on the right-angle corner of the square represents the origin of the reference coordinate frame used by Motive to compute the tracking data. Note that the z axis on the square must point towards the user (Figure 6). This will ensure that all frame assignments in the Autonomous Vehicles Research Studio applications are consistently defined.

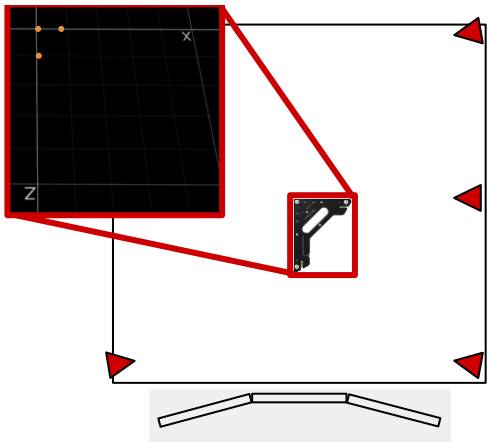

Figure 6. Positioning the CS-200 ground square

2. Under the `Camera Calibration > Ground Plane > Ground Plane Calibration Square` pane, ensure that the '*`Vertical Offset (mm)`*' is set to 19 mm (Figure 7). Click '*`Set Ground Plane`*'.

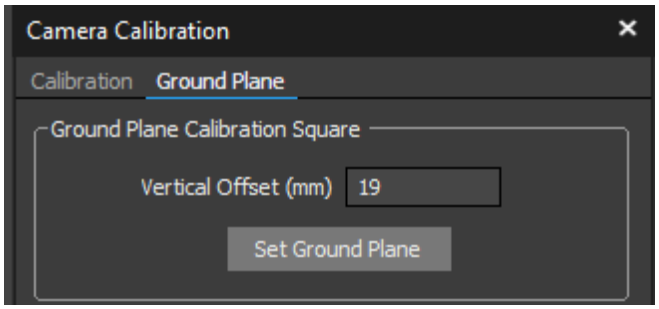

Figure 7. setting vertical offset for ground plane (Motive 2.0.1)

3. Save the resulting file (*.cal) in a convenient location (e.g. Documents > Optitrack). Under the file menu, click on `Save Profile As`. Save it (*.xml) in a convenient location as well. This will save a profile with no rigid bodies (objects with markers) that can be used to add rigid bodies later.

B. Research Studio Frame vs Motive Frame

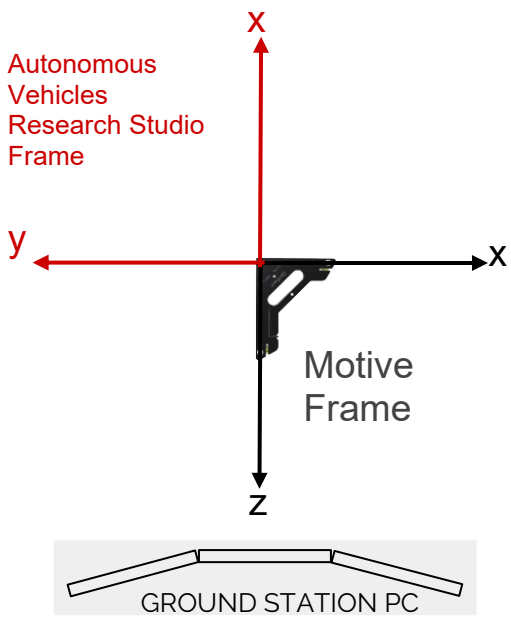

Figure 8: Research Studio frame and Motive frame

Note: The Research Studio frame has a fixed orientation with respect to the Motive frame (defined using the ground calibration square). It is recommended to orient the ground square to match the orientation of the black solid frame (pointed towards the ground control station PC, Figure 8). The Research Studio frame corresponds to the solid red frame.

C. Checkpoint – Captured Volume Screenshot

Once camera calibration is complete, you can view the volume captured by the cameras. This tool is useful in fine tuning the camera view to optimize the volume captured. Note that the displayed volume is an approximation and is generated with larger sized reference markers. Actual capture volume for the QDrones and QBot 2/2e will be slightly smaller than illustrated.

1. In the **Perspective View** toolbar in **Motive**, click on the **Visual Aids** icon.

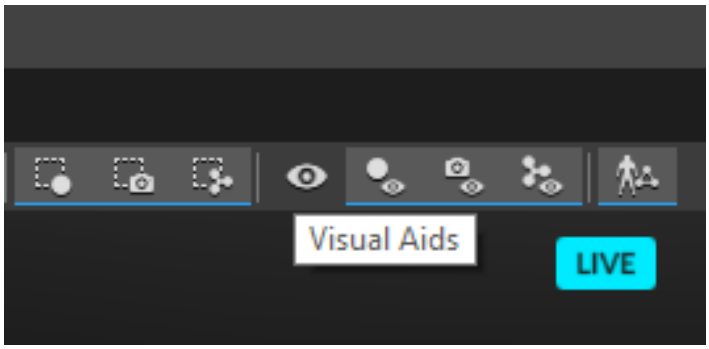

2. In the drop menu that opens, click on **Capture Volume**.

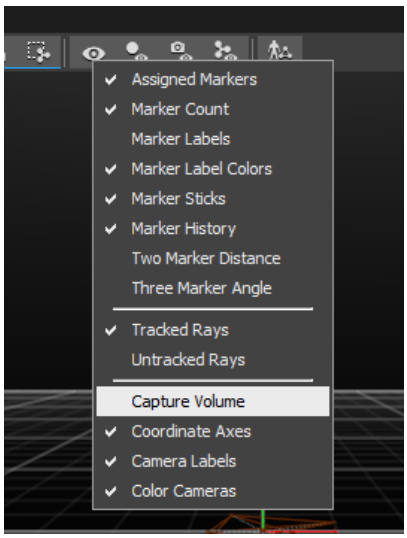

3. Motive should now display the captured volume in the **Perspective View** window.

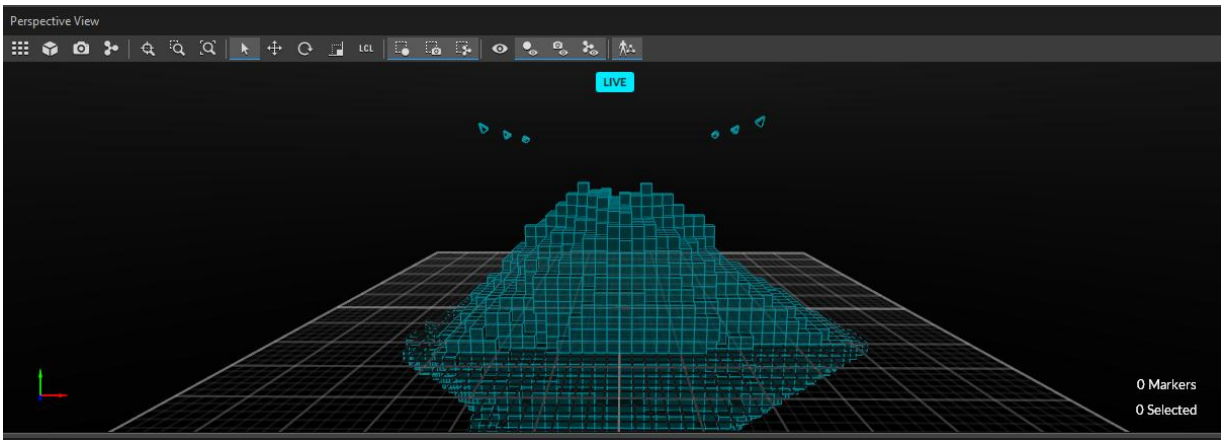

Take a screenshot of the captured volume future reference/tech support!

© Quanser Inc., All rights reserved.

QUANSER
INNOVATE · EDUCATE

Solutions for teaching and research. Made in Canada.