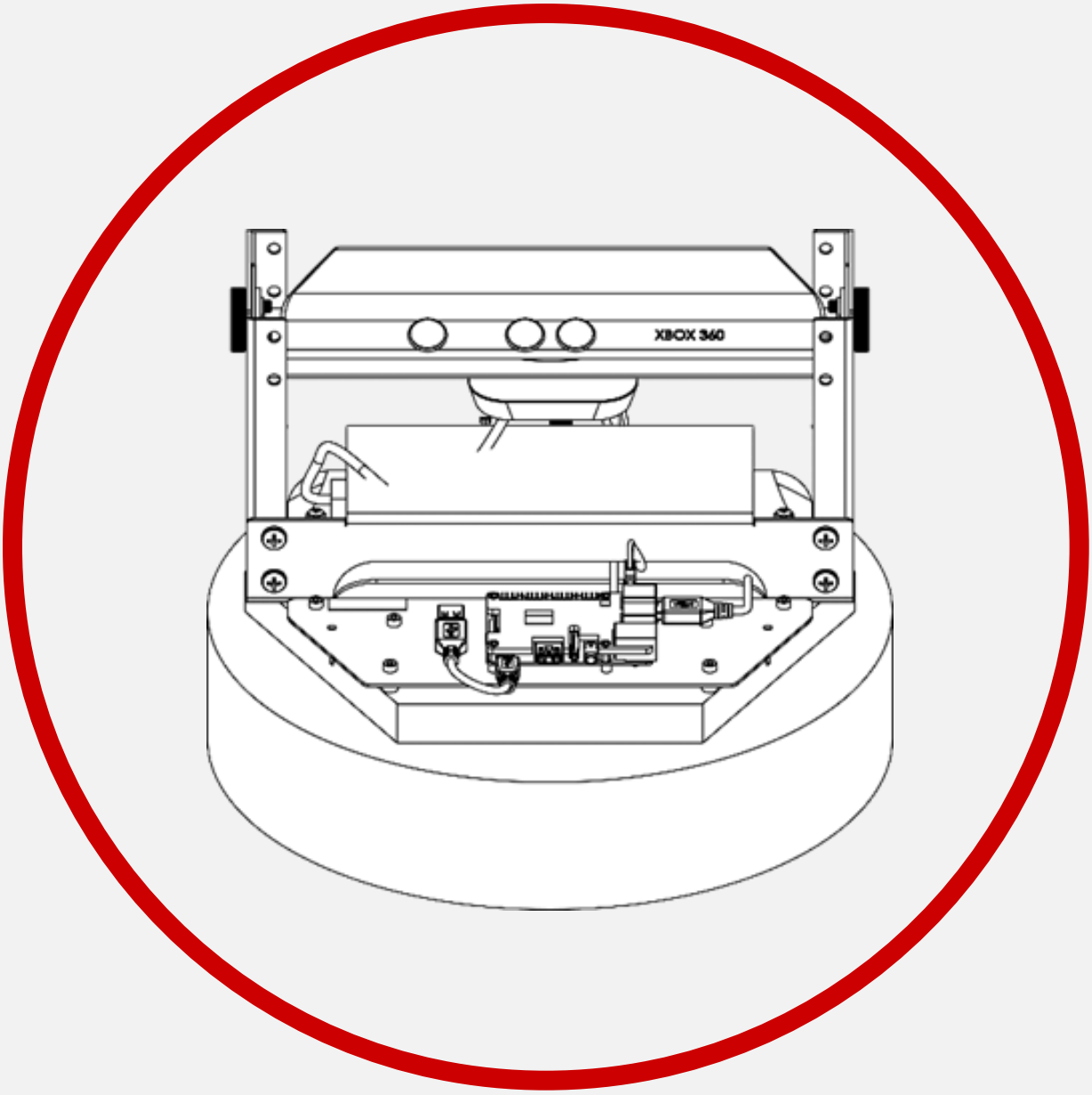

Autonomous Vehicles Research Studio

Setup Guide – QBot 2/2e Communication

v 2.0 – 18th $April$ 2023

Table of Contents

A. Communicating with QBot 2/2e 2

B. Boot-Up for QBot 2/2e 3

i. Turning the vehicle ON 3

ii. Testing the Connection 3

A. Communicating with QBot 2/2e

The QBot 2/2e is shipped pre-configured to connect to the wireless network created by the provided router: Quanser_UVS. This happens automatically following a boot sequence when they are powered on. To ensure that the drone is connected, observe if there is an IP in the LCD screen on top of the drone and try to ping it from the command prompt in the ground control station, similar to ensuring that the ground control station PC - router connection has been established in the router to PC documentation.

To connect additional vehicles to the UVS network, the 5GHz and 2.4GHz bands on the router have been configured as follows:

5GHz:

SSID: Quanser_UVS-5G Password: UVS_wifi

2.4GHz:

SSID: Quanser_UVS Password: UVS_wifi

Router login credentials are as follows:

Username: admin Password: Quanser_123

The QBot 2/2e does have a preset IPV4. For a successful connection, the DHCP server option on the router must be enabled. For the Netgear Nighthawk router provided with the AVRS system, the DHCP server can be found by going to Advanced/Setup/LAN Setup.

To ensure compatibility with the Self-Driving Car Research studio, the **5GHz band** for the Netgear Nighthawk router has been configured to **channel 44.** If you do notice intermittent issues with communication to any of the vehicles, it is recommended that you use a WiFi spectrum analyzer and check if there are networks which are broadcasting on the same channel but at a higher signal strength. Microsoft has a free WiFi analyzer: **(** https://www.microsoft.com/en-us/p/wifi-analyzer/9nblggh33n0n?activetab=pivot:overviewtab#)

You can change the Netgear Nighthawk's channel number by logging into the router and checking the channel number under the 5GHz wireless band.

B. Boot-Up for QBot 2/2e

i. Turning the vehicle ON

Turn on the QBot 2/2e by using the power switch O/I on the left back side.

ii. Testing the Connection

Find the IP of the QBot 2/2e. This IP address can be found on the QBot 2/2e's base (Figure 1).

Figure 1: QBot 2/2e's IP address

Open a command prompt on the ground control station PC (type cmd in the start menu). Type the following command: `ping 192.168.2.x -t` where x represents the last digits of the QBot 2/2e's IP address. A reply should be registered as in Figure 2, which indicates that a connection has been established. You can press CTRL+C to terminate the ping.

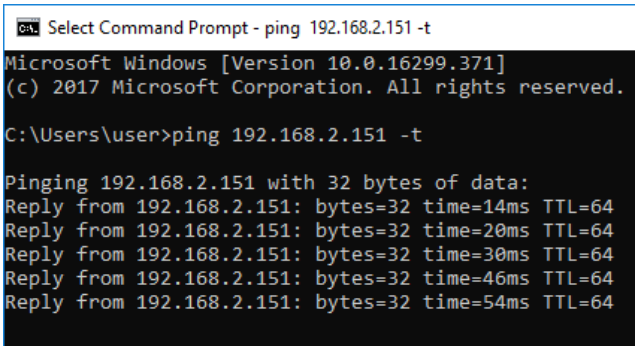

Figure 2. Checking the connection between the QBot 2/2e and the ground control PC

Note: The QBot 2/2e may take up to 5 minutes to connect to the router. If it still hasn't connected, power cycle the QBot 2/2e and check network connection. If issues persist, contact Quanser technical support (tech@quanser.com).

Note: Communication setup for the QBot2e is set up the same as the QBot2.

© Quanser Inc., All rights reserved.

QUANSER
INNOVATE · EDUCATE

Solutions for teaching and research. Made in Canada.