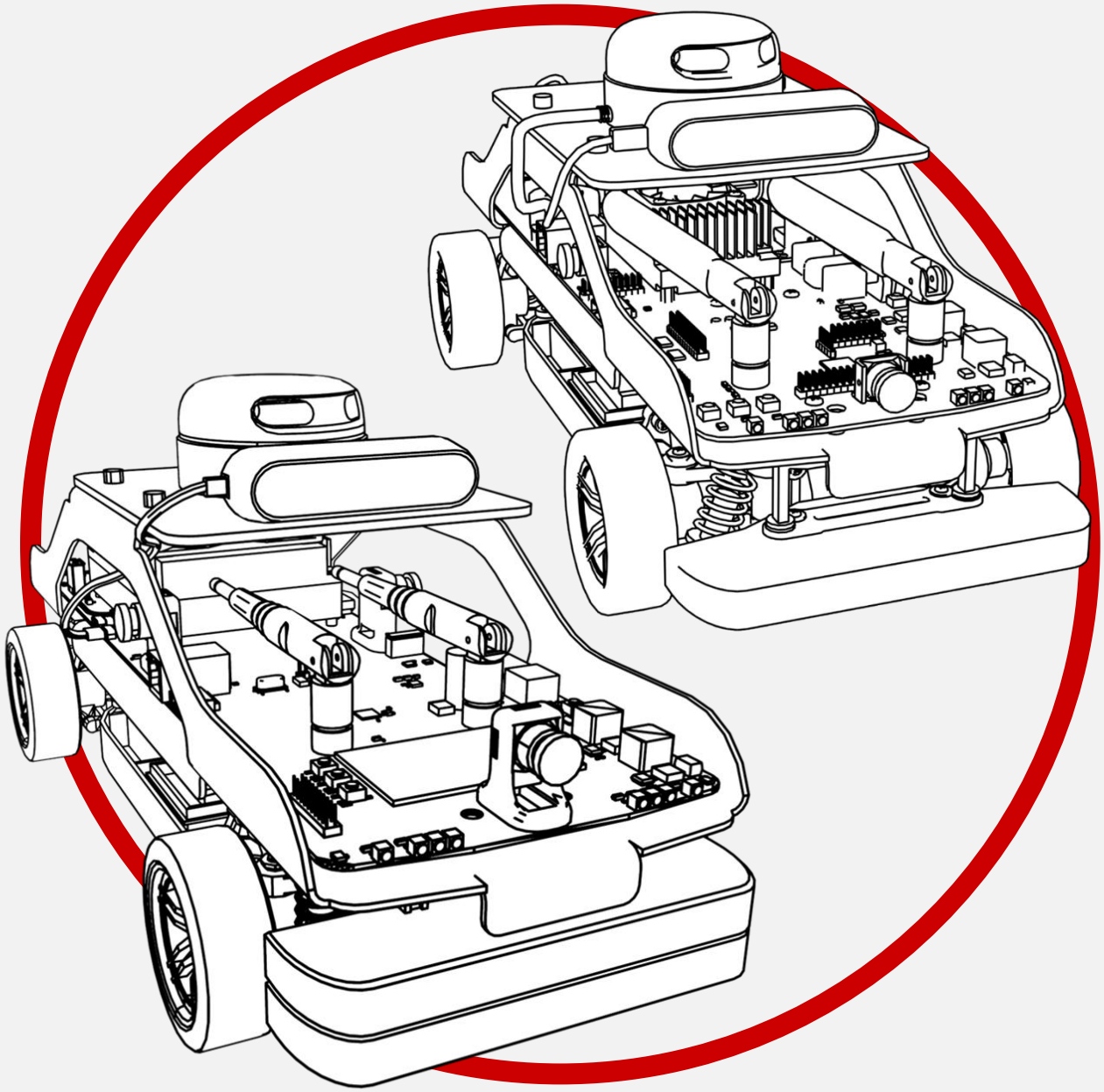

Self-Driving Car Studio

General Setup Guide – QCar 1 and 2

v 2.0 – 1st Oct 2024

© 2024 Quanser Inc., All rights reserved

For more information on the solutions Quanser Inc. offers, please visit the web site at: http://www.quanser.com

Quanser Inc.
119 Spy Court
Markham, Ontario
L3R 5H6, Canada

info@quanser.com
Phone : 19059403575
Fax : 19059403576
printed in Markham, Ontario.

This document and the software described in it are provided subject to a license agreement. Neither the software nor this document may be used or copied except as specified under the terms of that license agreement. Quanser Inc. grants the following rights: a) The right to reproduce the work, to incorporate the work into one or more collections, and to reproduce the work as incorporated in the collections, b) to create and reproduce adaptations provided reasonable steps are taken to clearly identify the changes that were made to the original work, c) to distribute and publicly perform the work including as incorporated in collections, and d) to distribute and publicly perform adaptations. The above rights may be exercised in all media and formats whether now known or hereafter devised. These rights are granted subject to and limited by the following restrictions: a) You may not exercise any of the rights granted to You in above in any manner that is primarily intended for or directed toward commercial advantage or private monetary compensation, and b) You must keep intact all copyright notices for the Work and provide the name Quanser Inc. for attribution. These restrictions may not be waved without express prior written permission of Quanser Inc.

Caution

This equipment is designed to be used for educational and research purposes and is not intended for use by the public. The user is responsible for ensuring that the equipment will be used by technically qualified personnel only. While the end-effector board provides connections for external user devices, users are responsible for certifying any modifications or additions they make to the default configuration.

Table of Contents

Self-Driving Car Studio	3
A. Getting Started	4
B. Roadmap Setup	4
C. Peripheral Set Up	6
D. Power Up Configurations	7
E. Network Wiring Setup	8
F. Connectivity Test	10
G. Software	11

Self-Driving Car Studio

General Setup Guide

Self-Driving Car Studio

Quanser's Self-Driving Car Studio contains curriculum designed to get students familiar with topics related to autonomous vehicles. Topics are intuitively subcategorized for convenience. Coding lab guides are developed in Python and can be used with both a physical and virtual implementation of the QCar and QCar 2.

This equipment is designed to be used for educational and research purposes and is not intended for use by the public. The user is responsible for ensuring that the equipment will be used by technically qualified personnel only.

A. Getting Started

Depending on the configuration purchased for the Self-Driving Car Studio Table 1 is a summary of what is available.

SDCS components	
1	QCar or QCar 2
2	Ground Control Station and Peripherals
3	Studio Maps
4	Studio Walls
5	Traffic Lights
6	Peripherals (router/monitors/keyboard…)

Table 1. SDCS Components

The following sections in this guide will describe the necessary steps to set up the Self-Driving Car Studio and which documents to review depending on the development environment you wish to use.

B. Roadmap Setup

The complete Self-Driving Car Research Studio includes two maps. Figure 1 and Figure 2 describe the components and dimensions of the two maps.

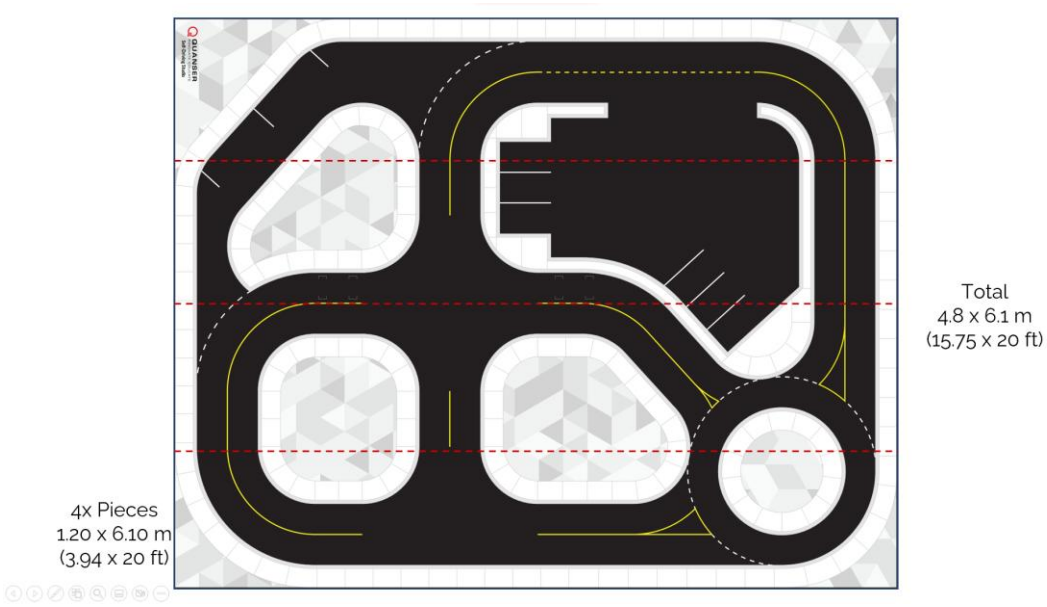

Figure 1: Large roadmap layout and dimensions

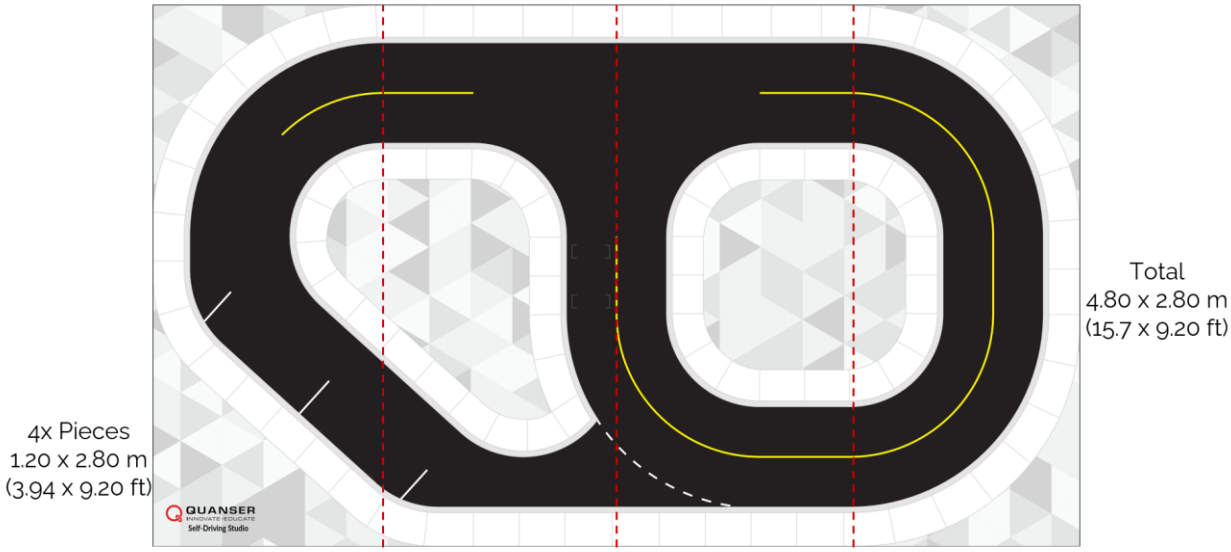

Figure 2: Small roadmap layout and dimensions

The studio also contains white walls for setting up a consistent perimeter around the large or small roadmaps.

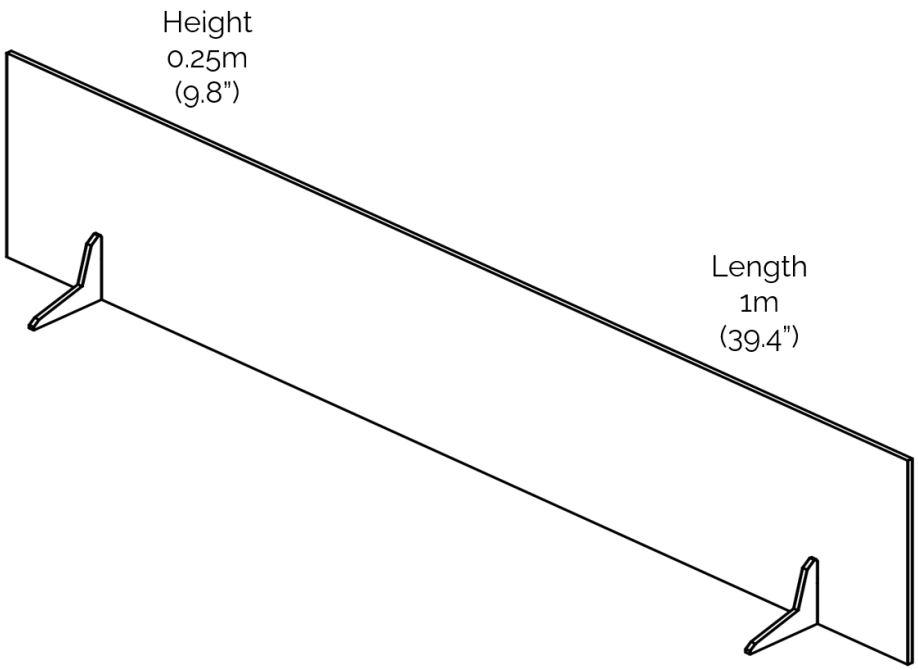

Figure 3: Studio walls dimensions

C. Peripheral Set Up

The ground control station (GCS) that is included in the complete Self Driving Car studio includes the following accessories:

- 3 monitors
- 1 PC w/ keyboard and mouse
- 1 High performance router

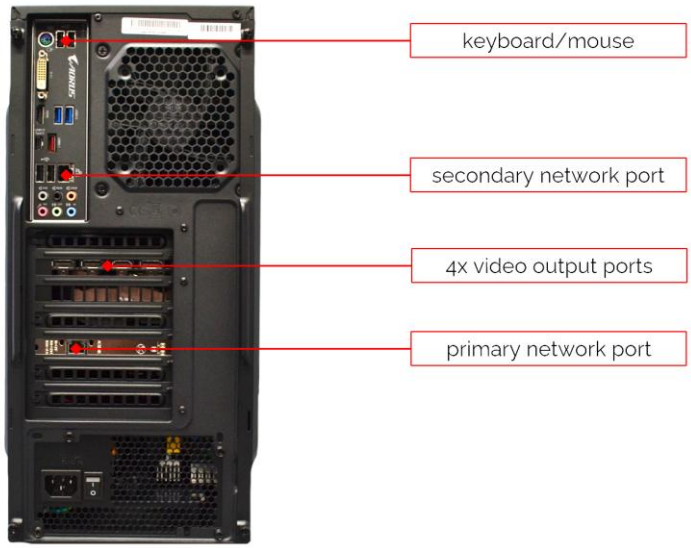

Figure 4: Self-Driving Car Studio PC peripheral inputs.

Use figure 4 as reference to set up the accessories for the Ground Control Station. Use the primary network port to connect the provided router. You may use the secondary network port available on the PC to connect any additional networks required by your institution. During the setup for the GCS, it is recommended that the user always has a full view of the workspace where the QCar will be operating, as shown in Figure 5.

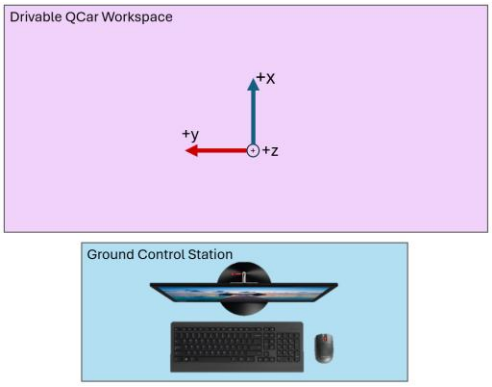

Figure 5: Recommended Self-Driving Car Research Studio layout

Each QCar includes the following peripherals:

- LiPo battery charger
- 2x LiPo 3300 mAh batteries
- External power supply and converter to power the QCar

If you are planning on running the QCar or the QCar 2 for extended periods of time, please make sure the battery is fully charged to ensure the best performance or that you use the external power supply. For an in-depth explanation on how to use the QCar with either a battery or the provided power supply please review the User Manual - Power document found under the user manuals for the Self-Driving Car Studio.

D. Power Up Configurations

The GCS supplied by Quanser is set up with two operating systems which can be selected during boot:

- Ubuntu 22.04LTS
- Windows 11 Professional

If the Ubuntu installation is selected during the bootup sequence, the credentials are as follows:

- **Username:** user
- **Password:** Quanser

Note: Ubuntu 22.04LTS installation is meant for users who intend to use Python or ROS only.

E. Network Wiring Setup

The Self-Driving Car Studio comes with a high-performance router. It is pre-configured to use both 2.4GHz and 5GHz bands for multiple PCs and devices. Figure 6 shows a general network connectivity. QCars and Traffic Lights connect to the router automatically on boot using Wi-Fi.

Figure 6: Basic Network Connectivity Map for the Self-Driving Car Studio

a. provided router
(router updated for SDCS QCar 2 configurations)

b. router power supply

c. ethernet cable

Figure 7. Router parts

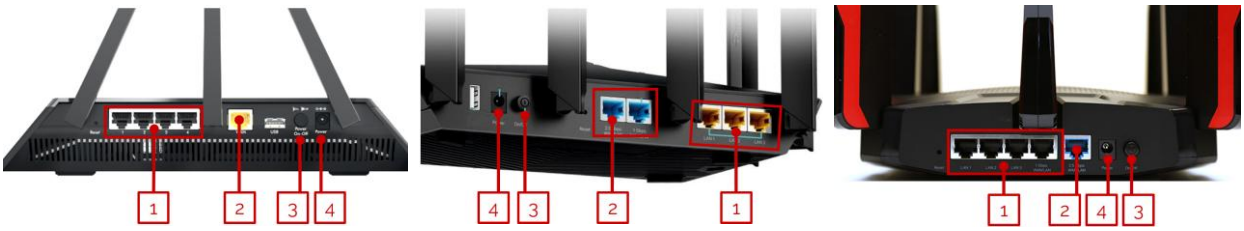

a. SDCS router (QCar 1)

b. SDCS router option 1 (QCar 2)

c. SDCS router option 2 (QCar 2)

Figure 8. Router parts

SDCS labs bought with QCar 1 include the router in figure 8a (Nighthawk R7000) and SDCS labs with QCar 2 include either the router in figure 8b (Archer AX95) or 8c (Archer GX90) depending on availability. Note that the routers in figure 8b and 8c are comparable and do not offer a difference in performance. Despite the different routers, the set-up sequence is the same:

1. Connect the power supply (Figure 7b) provided with the router to the power port on the back of the router (number 4 in Figure 8).

2. Using the primary network port highlighted in Figure 4, connect the ground control station PC to the router using the provided ethernet cable (Figure 7c) to one of the LAN ports on the back of the router (number 1 in Figure 8). Make sure to not use the WLAN ports (number 2 in Figure 8). You can use the other LAN ports for connecting other PCs if they are going to use the same network.

Note: DO NOT use the port labelled WLAN (number 2 in Figure 8) to connect to the ground control station PC. This port is used to provide an internet connection to the router, **which is not recommended,** as the router is configured to optimize local traffic only, if connected to the internet, your connection with your device will become slower.

Note: DO NOT use an ethernet switch or any other device between the router and the ground control station PC.

3. Turn on the router using the power button (number 3 in Figure 8). After a few minutes, the lights on the front of the router should start flashing with a white light to indicate to the user that the ports are active.

F. Connectivity Test

Once the network wiring has been completed you can power on the QCar and use the ping test in a terminal or command prompt to confirm connectivity between the QCar and the Ground Station. In Figure 9, the connectivity test was done using the IPv4 address of the QCar which can be found on the LCD display, the **-t** at the end makes sure that the test does not only try to send 4 packets but instead send packets continuously. Make sure to stop this by using the keyboard shortcut Ctrl+C

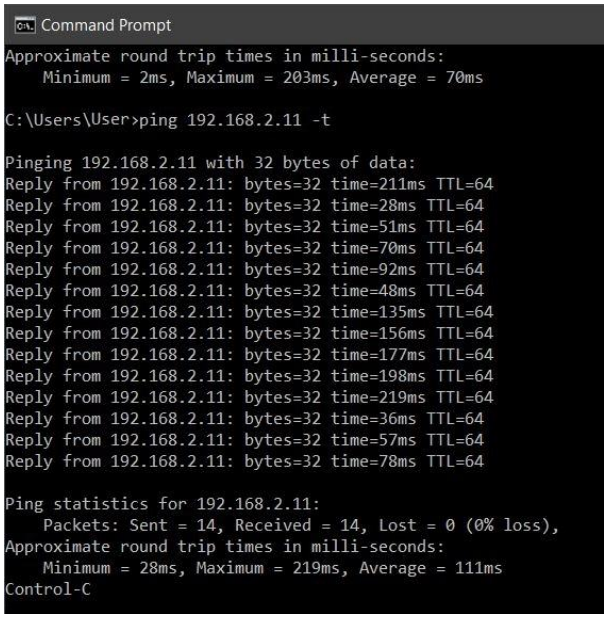

```
Command Prompt
Approximate round trip times in milli-seconds:
    Minimum = 2ms, Maximum = 203ms, Average = 70ms

C:\Users\User>ping 192.168.2.11 -t

Pinging 192.168.2.11 with 32 bytes of data:
Reply from 192.168.2.11: bytes=32 time=211ms TTL=64
Reply from 192.168.2.11: bytes=32 time=28ms TTL=64
Reply from 192.168.2.11: bytes=32 time=51ms TTL=64
Reply from 192.168.2.11: bytes=32 time=70ms TTL=64
Reply from 192.168.2.11: bytes=32 time=92ms TTL=64
Reply from 192.168.2.11: bytes=32 time=48ms TTL=64
Reply from 192.168.2.11: bytes=32 time=135ms TTL=64
Reply from 192.168.2.11: bytes=32 time=156ms TTL=64
Reply from 192.168.2.11: bytes=32 time=177ms TTL=64
Reply from 192.168.2.11: bytes=32 time=198ms TTL=64
Reply from 192.168.2.11: bytes=32 time=219ms TTL=64
Reply from 192.168.2.11: bytes=32 time=36ms TTL=64
Reply from 192.168.2.11: bytes=32 time=57ms TTL=64
Reply from 192.168.2.11: bytes=32 time=78ms TTL=64

Ping statistics for 192.168.2.11:
    Packets: Sent = 14, Received = 14, Lost = 0 (0% loss),
Approximate round trip times in milli-seconds:
    Minimum = 28ms, Maximum = 219ms, Average = 111ms
Control-C
```

Figure 9: Sample ping test between PC and QCar using IPv4 address.

G. Software

The Self Driving Car Studio includes a variety of research examples as well as teaching content. The research examples include numerous examples for MATLAB/Simulink, Python as well as ROS. The teaching content is primarily focused on Python based labs accompanied with extensive Lab Guides.

To ensure functionality of the QCars, try running the hardware tests (also included with the research examples). You can run the hardware tests in either MATLAB/Simulink or Python. If using the PC provided by Quanser or a PC where the resources have been installed, go to the location of the hardware tests for more information:

>> Documents/Quanser/examples/sdcs/qcar/hardware/hardware_tests

> Note: **If using QCar 2, use the qcar2 folder** instead of the qcar folder in the location highlighted in red above.

Note that Simulink examples run directly from the PC and no extra software has to be set up. **However, if you plan to use Python resources** including any of the teaching resources, they will run directly from the QCar which **will require some initial setup. Refer to the User Manual – Python of QCar or QCar 2**.

>> Documents/Quanser/user_manuals /qcar

The manual will guide you to understand the available Python files and how to set up the QCar to be able to run these files.

To find the teaching resources, go to the SDCS folder where the skills activities students can do are located. These resources work for both QCar and QCar 2. Make sure to read the lab guide that will highlight changes needed depending on the system.

>> Documents/Quanser/SDCS

© Quanser Inc., All rights reserved.

QUANSER
INNOVATE · EDUCATE

Solutions for teaching and research. Made in Canada.