Analog Signal Processing for Seismic Application

Synopsis of the Summer Intern Report submitted in partial fulfilment of the requirements for the Award of the Degree

Bachelor of Technology (Hons.)
in
Electrical Engineering

and

Master of Technology
in
Electrical Engineering
with
specialization in
Instrumentation and Integrated Electronics

by

Panthadip Maji
20EE37001

Under the supervision of

Dr Debashis Mandal

Department of Electrical Engineering

Indian Institute of Technology, Kharagpur

September, 2024

Department of Electrical Engineering
Indian Institute of Technology
Kharagpur 721 302, W.B., India

Phone: +91-3222-283032(O),
FAX: +91-3222-282262/282700/255303
Mobile: +91-9903653291
E-mail: debashis@ee.iitkgp.ac.in;

Dr. Debashis Mandal, Assistant Professor

Date: 21st August, 2024

To Whom It May Concern

This is to certify that Mr. Panthadip Maji, a student of Electrical Engineering Department, Indian Institute of Technology Kharagpur has worked with me during the period of 10-05-2024 to 15-07-2024. The student has worked in a project/research topic entitled Analog Signal Processing for Seismic Application during the aforesaid period.

I am favorably impressed with the student's diligence, obedience and sincerity towards the work assigned to the said student.

Wish him every success in his life and career.

Sincerely,

Debashis Mandal

Dr. Debashis Mandal
Assistant Professor, Department of Electrical Engineering
Indian Institute of Technology Kharagpur
Kharagpur, West Bengal, India

Dr. Debashis Mandal
Assistant Professor
Dept. of Electrical Engineering
IIT Kharagpur, 721302

CONTENTS

1. Introduction.....1
2. Scope & Objectives.....2
3. Prior Art.....2
4. Work Progress & Achievements
   a. Theory
      i. MEMS Capacitive Accelerometer Modelling(1 Axis).....2-3
      ii. ASP for MEMS Capacitive Accelerometer.....3-4
      iii. Geophone Modelling(1 Axis).....4-5
      iv. ASP for Geophone.....5
   b. Specifications
      i. Nature of Seismic Signals.....5-7
      ii. Availability of Raw Accelerometers/ Geophones.....7-8
      iii. Desired I/P specifications from the above data.....8
   c. Accelerometer Circuit Level Implementation & Modelling
      i. Current Mode Conversion.....8
      ii. Voltage Mode Conversion.....9-10
   d. Accelerometer Simulation Results
      i. Voltage Mode Conversion.....10-12
5. References.....13
6. Appendix.....14-15

1. Introduction:

Seismic signal detection plays a crucial role in understanding and monitoring geophysical phenomena such as earthquakes, volcanic eruptions, and mining blasts. The accurate detection and processing of these signals are imperative for early warning systems, disaster preparedness, and scientific research. Traditional methods of seismic detection have employed various types of sensors, including accelerometers and geophones, each offering unique advantages in capturing ground motion and velocity information.

Figure 1. (a) LIS3L02AS 3-axis Accelerometer (b) 4.5 Hz 1C Geophone

Accelerometers are sensors that measure the acceleration of an object in motion along three orthogonal axes. In the context of seismic detection, they are employed to record the dynamic acceleration of the ground, providing valuable data on the intensity and direction of seismic waves. Geophones, on the other hand, measure the velocity of ground motion along three orthogonal axes. By utilising both accelerometers and geophones, we can obtain a comprehensive six-axis measurement of seismic activity, encompassing three-axis acceleration and three-axis velocity information. This dual approach enhances the accuracy and reliability of seismic signal detection and provides a more detailed understanding of ground motion dynamics.

The analog-to-digital conversion of seismic signals is a critical step in processing the data captured by accelerometers and geophones. An Analog to Digital Converter(ADC) circuit is designed to interface with these sensors and convert the analog signals into digital form for further analysis. In this project, a VCO (Voltage-Controlled Oscillator)-based 1-1 MASH (Multi-Stage Noise Shaping) structured ADC circuit is being developed to achieve high precision in analog-to-digital conversion.

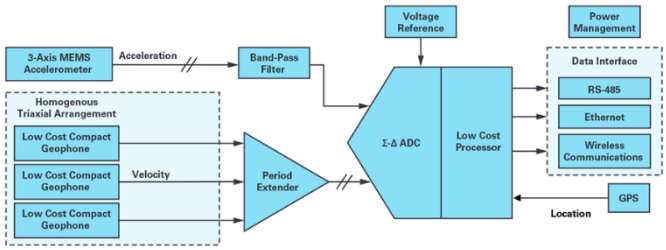

Figure 2. General block diagram of a low-cost seismic instrument[1]

One of the challenges in seismic signal processing is the efficient storage and transmission of the vast amounts of data generated by accelerometers and geophones. To address this, the project aims to implement time multiplexing techniques to reduce the number of data channels(Shown in Fig2). Time multiplexing involves sequentially sampling multiple signals and interleaving them into a single data stream, thereby reducing the hardware and storage requirements. By multiplexing the six-axis data (three-axis acceleration and three-axis velocity) from the accelerometers and geophones, we can streamline the data acquisition process and optimize the use of available resources. This approach not only reduces the complexity of the data acquisition system but also lowers the overall cost and power consumption.

2. Scope & Objectives:

a. First we have to process the Accelerometer/ Geophone analog data to a usable input to our ADC, i.e., VCO Based 1-1 MASH Structure. For that purpose, we have to use Analog Signal Processing (ASP) circuits.

b. We can further optimise the circuit by generating velocity information with integrating acceleration obtained from an accelerometer; that's how we don't need geophones, only an accelerometer will serve the purpose.

3. Prior Art:

a. **[2]**This paper describes a SOI MEMS oscillating accelerometer with a fully differential CMOS continuous-time read-out circuit. A new ultra-low-noise continuous-time bandpass transimpedance amplifier (TIA) is proposed and serves as the front-end of the read-out circuit.

b. **[3]**A fully differential CMOS readout circuit for SOI resonant accelerometer is reported. The readout circuit is essentially an oscillator, consisting of an oscillator and a low noise automatic amplitude control (AAC) loop.

c. **[4]**Different Kinds of switched capacitor circuit implementation in MEMS accelerometer signal processing is provided.

d. **[5]**Capacitance detection is a universal transduction mechanism used in a wide variety of sensors and applications. It requires an electronic front-end converting the capacitance variation into another more convenient physical variable, ultimately determining the performance of the whole sensor. In this paper we present a comprehensive review of the different signal conditioning front-end topologies targeted in particular at sub-femtofarad resolution.

4. Work Progress & Achievements

a. Theory:

i. MEMS Capacitive Accelerometer Modelling(1 Axis) :

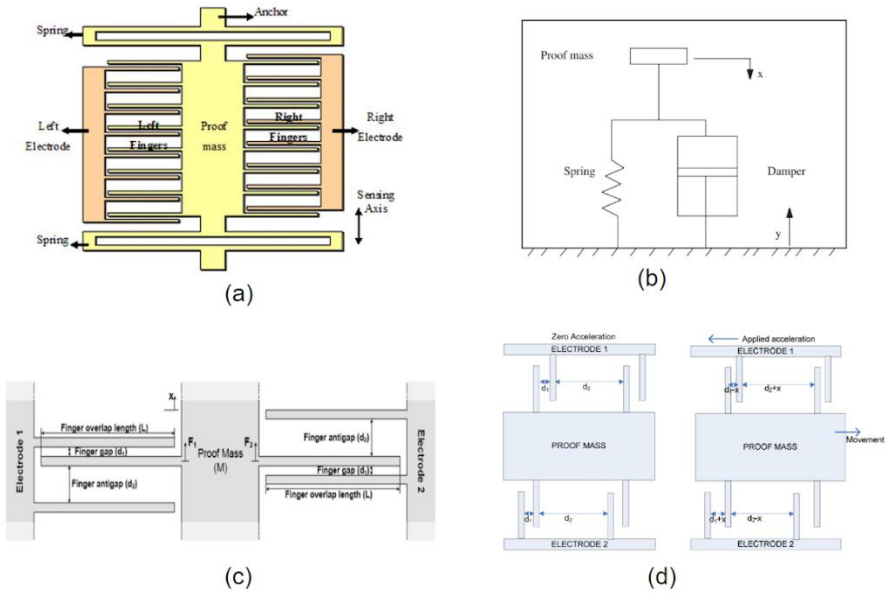

Figure 3. (a) Differential Capacitive Accelerometer[7], (b) Modelling to spring mass damper system[6], (c) MEMS accelerometer dimensions[7], (d) Capacitance change depending on the applied acceleration[7].

The most common structure used to model capacitive MEMS accelerometers is the mass spring damper system. Proof mass of the accelerometer corresponds to mass, spring shaped structure of the accelerometer corresponds to spring and damping inside the accelerometer behaves as damper. Damping occurs for Couette flow (Is observed as gas flow between the proof mass and top plate and between the proof mass and substrate when acceleration is exerted), Squeeze Film Damping (Due to inserted acceleration gas molecules in between the fingers squeezes which results as a damping factor). The resulting relations**[7]** would be,

$$\frac{X(s)}{a_{ext}(s)} = \frac{1}{s^2+2\zeta\omega_n s+\omega_n{}^2}, C_{rest} = \frac{N\varepsilon_0 hL}{d_1} + \frac{(N-1)\varepsilon_0 hL}{d_2}$$

$$C_{1,2} = \frac{N\varepsilon_0 hL}{d_1 \mp x} + \frac{(N-1)\varepsilon_0 hL}{d_2 \pm x},$$

$$\Delta C = C_1 - C_2 = \frac{2N\varepsilon_0 hLx}{d_1{}^2 - x^2} - \frac{2(N-1)\varepsilon_0 hLx}{d_2{}^2 - x^2}$$

$$\Delta C = \frac{2\varepsilon_0 hLx}{d^2}, when\ d_1 = d_2 = d\ \&\ x \ll d$$

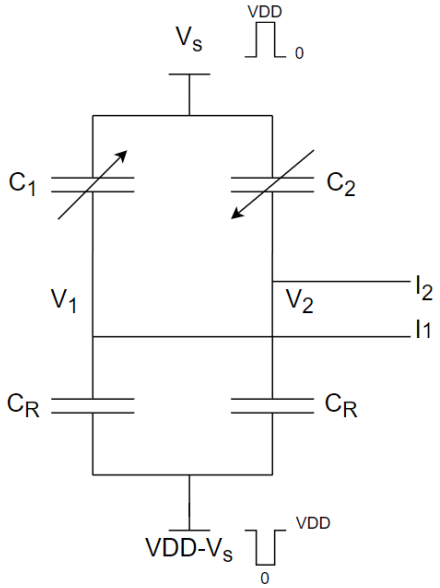

Figure 4. Differential Capacitive Bridge Circuit

Now we have connected C1 & C2 like Fig4. The corresponding equations would be**[17]**,

$$q_1 = -C_1(V_s - V_1) + C_R(V_1 - VDD + V_s) = (-C_1 + C_R)V_s + (C_1 + C_R)V_1 - C_R VDD$$

Similarly, $q_2 = (-C_2 + C_R)V_s + (C_2 + C_R)V_2 - C_R VDD$

$$I_1 = \frac{dq_1}{dt}, I_2 = \frac{dq_2}{dt}, V_1 = V_2 = VDD/2 (Later\ Nodes\ will\ be\ \ connected\ to\ opamp's\ i/p)$$

$$\Delta I = I_1 - I_2 = \frac{d}{dt}(q_1 - q_2) = \frac{d}{dt}\{-(C_1 - C_2)V_s + (C_1 - C_2)(VDD/2)\}$$

$$\Delta I = \frac{d}{dt}\{(C_1 - C_2)(0.5 \times VDD - V_s)\}$$

$$\Delta I = -s.LT\{\Delta C \times (V_s - 0.5 \times VDD)\}, where\ LT = Laplace\ Transform$$

ii. ASP for MEMS Capacitive Accelerometer:

The o/p current(ΔI) equation contains "s" in it (that we don't want, to mitigate we need integrators) and the initial part of our ADC contains a V2I converter(shown in Fig5). By following Analog Signal Processing circuits, we can process o/p current of the capacitive bridge/ accelerometer to apply at the ADC i/p. Note in Fig5 the velocity information extraction from acceleration is also provided.

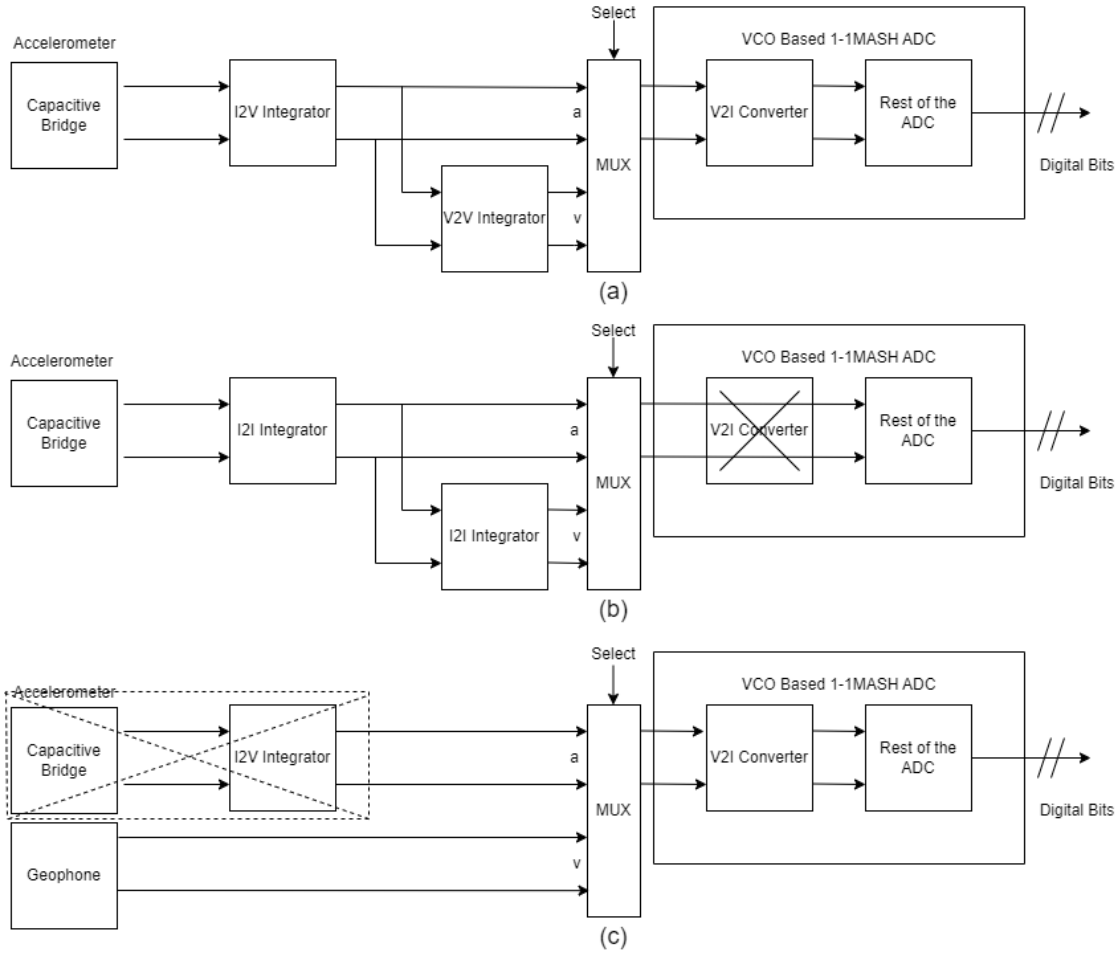

Figure 5.(a) Accelerometer Voltage Mode Conversion (b) Accelerometer Current Mode Conversion (c) Geophone Voltage Mode Conversion

iii. Geophone Modelling (1 Axis):

Geophones are based on an inertial mass (proof mass) suspended from a spring. They function much like a microphone or loudspeaker, with a magnet surrounded by a coil of wire. In modern geophones, the magnet is fixed to the geophone case, and the coil represents the proof mass. Resonant frequencies are generally in the 5 to 50 Hz range. The system uses electromagnetic induction, so, according to Faraday/Lenz law: $V_o \propto \frac{dx}{dt}$, where V_0=Induced Voltage, x=Magnet Relative Displacement w.r.t Coil The velocity of the proof mass relative to the case is transformed into a voltage. The system does not give any response to the differing position of the proof mass, only the rate of movement between two positions. So, for data recorded through a geophone, the recorded values are the velocity of the magnet relative to the coil multiplied by the sensitivity constant in Volts per m/s, i.e., $V_o = s_G . \frac{dx}{dt}, where\ s_G = Sensitivity\ Constant.$ Like the MEMS accelerometer, spring-mass damping structure is occurring here. Corresponding equations would be**[10]**,

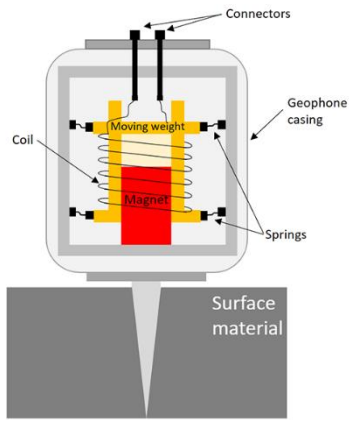

Figure 6. Geophone element internal block diagram[9]

$$m\frac{\partial^2 x}{\partial t} + \beta\frac{\partial x}{\partial t} + kx = m\frac{\partial^2 u}{\partial t}, where\ m = proof\ mass, k = spring\ constant, \beta = damping$$

$$Constant, u = Displacement\ of\ Geophone/Case\ w.r.t\ ground$$

$$Or, \frac{\partial^2 x}{\partial t} + 2\zeta\omega_n\frac{\partial x}{\partial t} + {\omega_n}^2 x = \frac{\partial^2 u}{\partial t}, \zeta = Damping\ Constant., \omega = Natural\ Frequency$$

$$Or, s^2X + 2\zeta\omega_n sX + {\omega_n}^2 X = s^2 U$$

$$Or, \frac{X}{U} = \frac{s^2}{s^2+2\zeta\omega_n s+{\omega_n}^2}$$

The frequency domain induced Voltage equation would be,

$$V_o = s_G sX = s_G s\frac{s^2}{s^2+2\zeta\omega_n s+{\omega_n}^2}U = s_G\frac{s^2}{s^2+2\zeta\omega_n s+{\omega_n}^2}(sU)$$

$$Or, \frac{V_o}{sU} = s_G\frac{s^2}{s^2+2\zeta\omega_n s+{\omega_n}^2},\ ILT(sU) = \frac{\partial u}{\partial t} = Geophone/Case\ velocity\ w.r.t\ ground$$

We got the Induced Voltage Vs. Ground Velocity transfer function(High Pass Plot). The Transfer function would look like below,

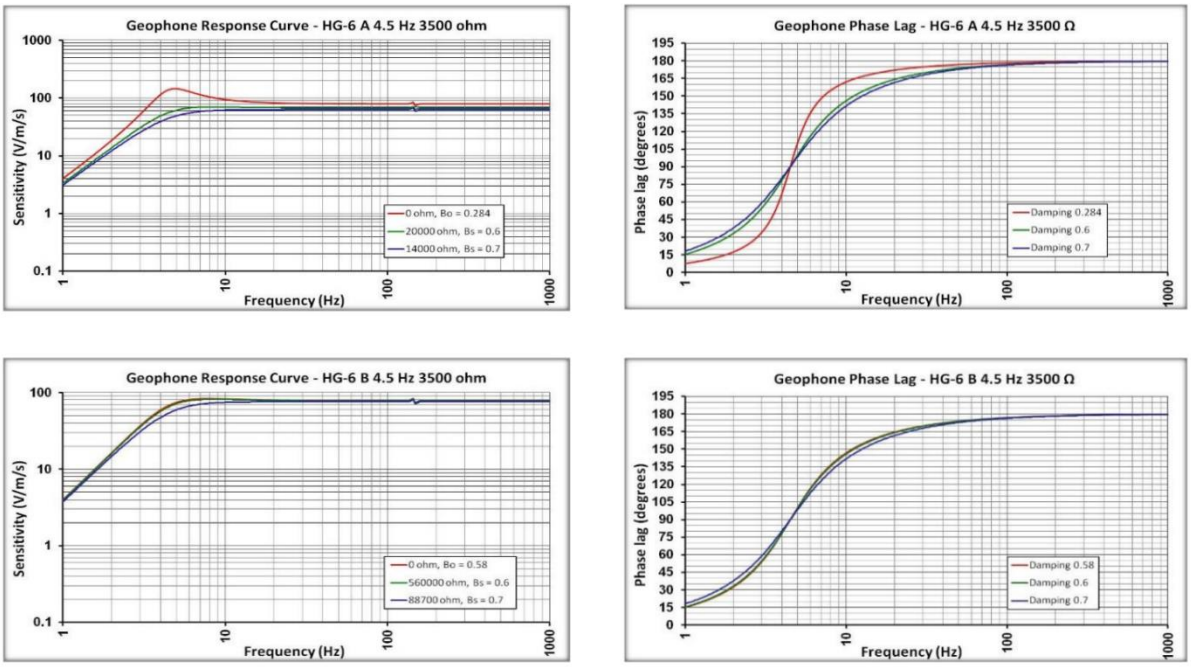

Figure 7. HG-6HS Geophone Element Characteristics for different damping resistances[8]

iv. ASP for Geophone:

We will directly be connecting the o/p of the geophone to the MUX i/p (shown in Fig5.(c)). So, no ASP is needed to process data from Geophone.

b. Specifications:

i. Nature of Seismic Signals:

An earthquake is an event that is caused by the movements and collisions of tectonic plates. The energy generated from the collisions propagates through and around the surface of the earth as seismic waves. These waves come in multiple directions and are categorised as body waves and surface waves**[1]**.

Waves (**P-waves**), which travel as compressions and rarefactions in the direction of propagation at 5-8 km/s, making them the fastest and least destructive due to their high energy decay. Secondary Waves (**S-waves**), or shear waves, follow P-waves, traveling orthogonally to the propagation direction at 60-70% of P-wave speed and are more destructive due to lower energy decay. Surface waves, comprising **Rayleigh** and **Love waves**, are slower but more destructive. Rayleigh waves cause rotational ground movement, while Love waves move parallel to the Earth's surface. The propagation speed of seismic waves varies with soil type. We have included some of the earthquake & volcanic eruption signals to get an idea about the amplitudes & frequency spectrum of seismic signals.

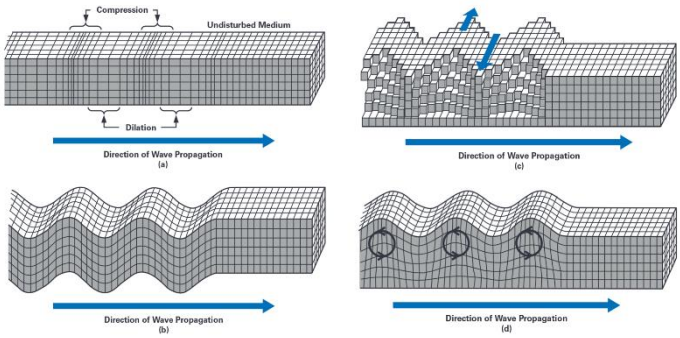

Figure 8. Types of seismic waves: (a) primary waves (b) secondary waves (c) Love waves (d) Rayleigh waves

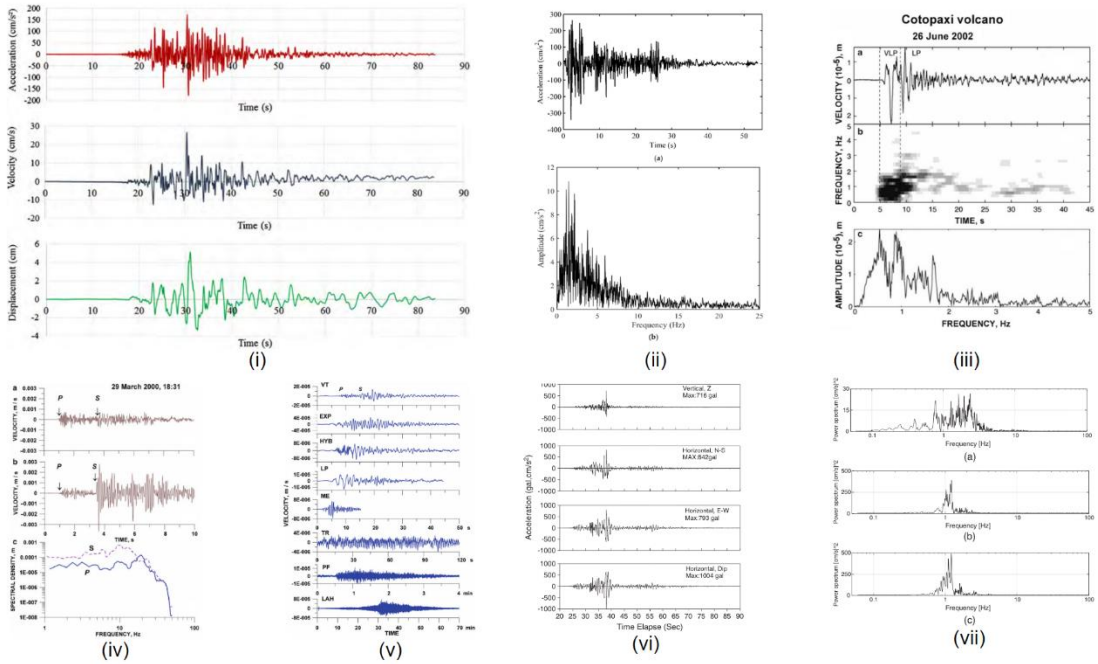

Figure 9

Fig9.(i) Acceleration-time, velocity-time, and displacement-time graphs of processed Muradiye-NS record of October 23, 2011, Van earthquake **[18]**.

Fig9.(ii) Recorded acceleration of El Centro earthquake: (a) Acceleration time history; (b) Amplitude spectrum**[19]**.

Fig9.(iii) Broadband velocity VLP seismic record accompanied by LP signal (a) recorded at Cotopaxi volcano on 26 June 2002 without any reported surface manifestation of volcanic activity, its spectrogram (b), and Fourier spectrum (c) (Modified from Molina et al. 2008)**[20]**.

Fig9.(iv) (a) vertical component (b) horizontal N-S component) and Fourier spectra of P and S waves (c) of volcano-tectonic earthquake (velocity, corrected for instrument response) preceding the 31 March 2000 flank eruption at Usu volcano, Hokkaido, and recorded at a distance of about 20 km by a short-period station (Courtesy of Japan Meteorological Agency, Sapporo, Japan)**[20]**.

Fig9.(v) Types of seismic signals (velocity, vertical component) recorded during the 1998-2011 unrest at andesitic Volcán de Colima. VT volcano-tectonic earthquakes, EXP seismic signals associated with magmatic explosive events, HYB hybrid signals associated mainly with white-cloud degassing, LP long-period signal recorded at different stages of unrest, ME microearthquake signals, forming together with short hybrid signals the microearthquake swarms, associated with extrusive and explosive activity, TR volcanic tremor recorded at different stages of unrest, PF signals associated with pyroclastic flows or rockfalls of incandescent rocks; and LAH signals associated with lahars. All seismic signals were recorded by broadband seismic stations at a distance of 4 km from the crater and corrected for instrument response. Courtesy of Colima Volcano Observatory**[20]**.

Fig9.(vi) The ground acceleration records of strong motion station CHY 080 from the Central Weather Bureau for the Chi-Chi Earthquake, including the NS and EW components of horizontal acceleration**[21]**.

Fig9.(vii) Power spectrums of ground motion records of station CHY 080 in the (a) vertical direction, (b) NS direction, and (c) EW direction**[21]**.

ii. Availability of Raw Accelerometers/ Geophones:

a. Link to the excel sheet for different accelerometers and purchase sites.

b. ADXL50 - this particular accelerometer has the property to change sensitivity as well as 0g Voltage level. By controlling R1, R2, R3 & Vx we can trim 0g and sensitivity.

c. SF1500 - this accelerometer has a

$$V_{OUT} = \left(\frac{R3}{R1}(1.8\,V - V_{PR})\right) + \left(\frac{R3}{R2}(1.8\,V - V_X)\right) + 1.8\,V$$

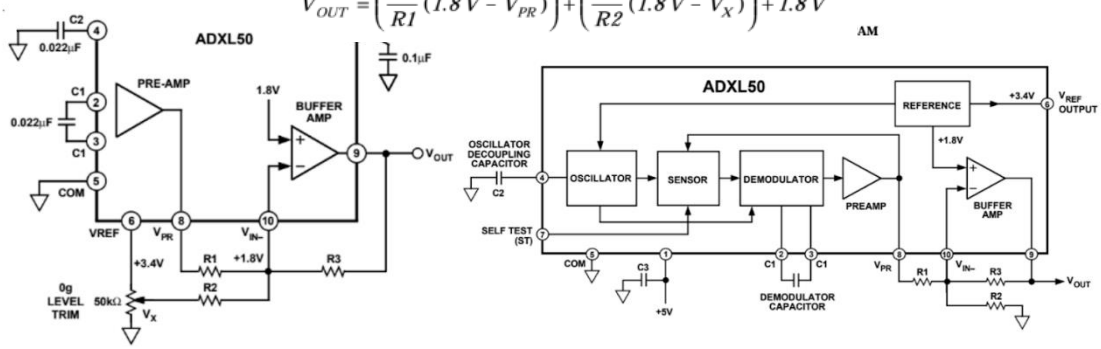

Figure 10. ADXL50 Functional Block diagram[11]

separate MEMS raw accelerometer used in various papers**[12]** for testing the readout circuit.

d. Nidhi Gupta, Shankar Dutta, Abha Panchal, Isha Yadav, Surender Kumar, Yashoda Parmar,

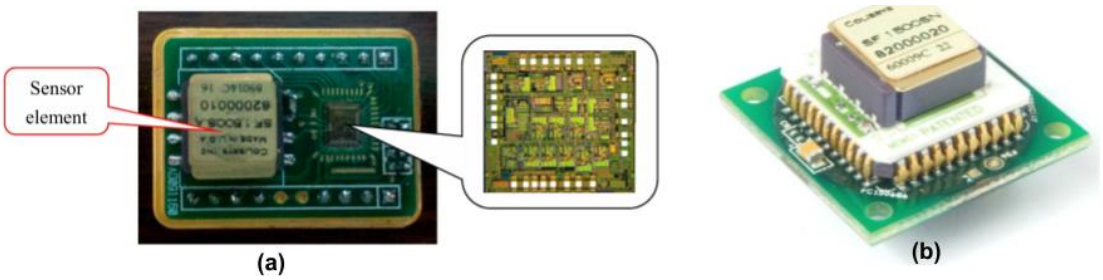

Figure 11. (a)Use of Colibrys SF1500 to test a readout circuit (b) Colibrys SF1500N Module

Siva Rama Krishna Vanjari, K. K. Jain1, D. K. Bhattacharya fabricated **2.21pf 0g** capacitance & **1.65 fF/g** sensitive with **17-42 g** dynamic range & **400 Hz** band-width capacitive accelerometer**[13]**.

e. Soumendu Sinhaa , Snigdha Shakyaa , Ravindra Mukhiyaa, Ram Gopala, B.D. Panta fabricated **3.83fF/g** sensitive, nominal cap **100fF**, **10g** measurement range & with a 400 **Hz** Band-width capacitive accelerometer**[14]**.

f. HG-6HS Geophone Element**[8]**: Natural Frequency = **4.5 Hz**, Spurious Frequency = **140 Hz**, Damping Constant = **0.284/0.58**, Sensitivity = **78.9 V/m/s**, Coil Res = **3500Ω**. HG-2 Geophone Element**[15]**: Natural Frequency = **2.5 H**z, Spurious Frequency = **150 Hz**, Damping Constant = **0.6**, Sensitivity = **150 V/m/s**, Coil Resistance =**3000Ω**.

Raw accelerometers are not available in the market. The available accelerometers are all containing inbuilt readout circuits (Like demodulator, Amplifiers, Mux) to get standard voltage/current at the output. In this case we have to fabricate Raw accelerometers or have to collect from other research institutions to test our readout circuit. But Raw Geophones are available in the market**[16]**, i.e., HG-6HS Geophone Element, HG-2 Geophone Element.

iii. Desired I/P specifications from the above data:

For the accelerometer the i/p specs should be; Amplitude < 5g, Frequency 0-500 Hz.

For Geophone the i/p specs should be; Amplitude < 0.0001 m/s, Frequency > 2.5 Hz.

c. Accelerometer Circuit Level Implementation & Modelling:

i. Current Mode Conversion:

We have explored two topologies, i.e., I2I integrators**[23]** & C2I Converters **[5]**(Capacitor to Current). The block diagrams of the explored topologies are given in Fig12. C2I topology can't be used in our case because each C2I conversion circuit needs to be discharged first very quickly, during this time the o/p current remains 0 that we don't want, rather we want the previous current value to be held during present discharging, that's how continuous acceleration data will be coming to our VCO Based 1-1 MASH ADC. Continuous 10-20 sets of data are needed to calculate the correct values for a few cycles because our ADC operates on the differentiation principle(**Σ**Δ ADC). I2I topology can't be used theoretically because to get high gain from expression **[23]** & from simulation we need high C_I (around 500nF). Such a high value of capacitance can't be realizable on-chip. So, next we will try to implement voltage mode topologies.

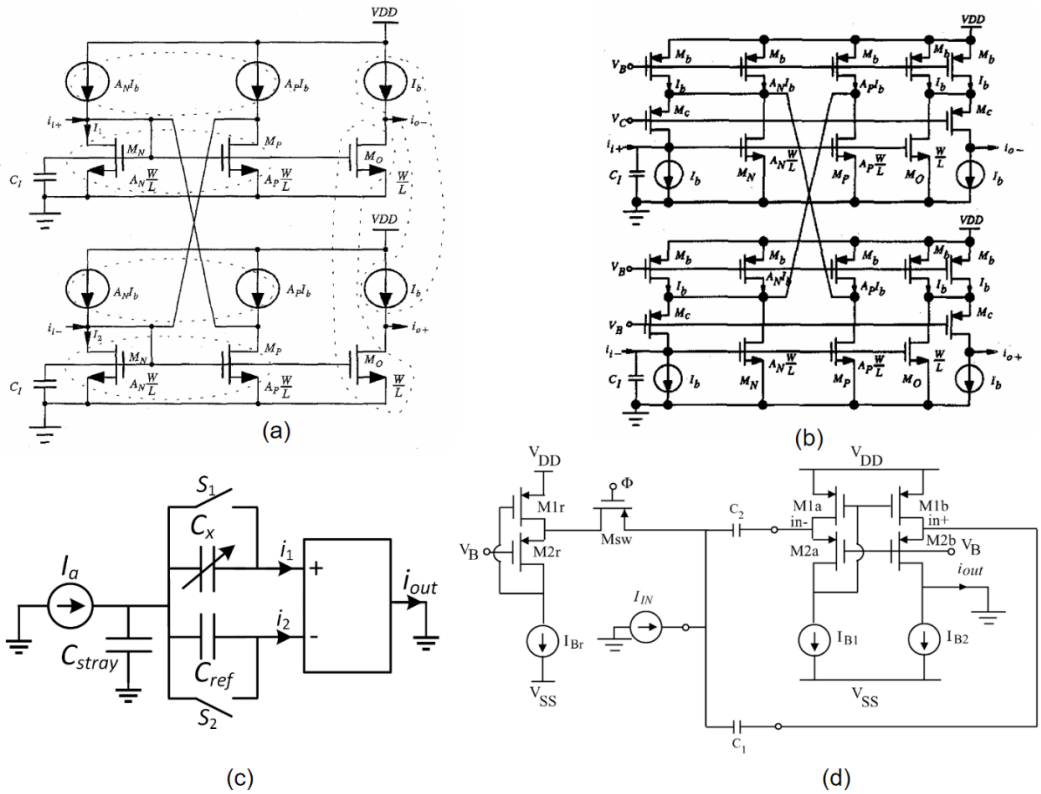

Figure 12. (a) Differential I2I Integrator (b) Folded Cascode Differential I2I Integrator (c) C2I converter (d) Implementation of C2I converter via CMOS

ii. Voltage Mode Conversion:

We can model the capacitive accelerometer in the following way(Fig13). The actual implementation is provided in the Appendix(1).

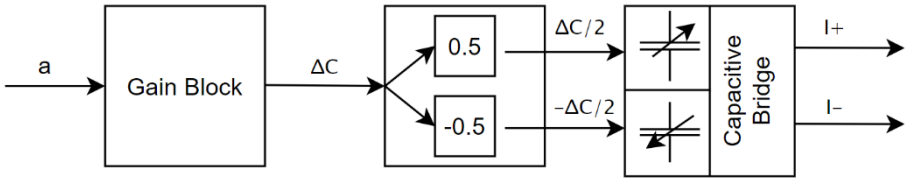

Figure 13. Electrical Realisation of Accelerometer

We can see in Fig13. that the variable capacitors/sensing capacitors are controlled by control signals. Such type of controllable capacitors can be modelled in verilogA by following code,

```
// VerilogA for PM_INTERN, Cap_Variable, veriloga

`include "constants.vams"
`include "disciplines.vams"

module var_capacitor(p, n, ctrl, gnd);
  input p, n, ctrl, gnd;
  electrical p, n, ctrl, gnd;

  // Local variables
  real C;//Capacitance
  real q;//Charge stored along capacitor terminals

  analog begin
    C = V(ctrl, gnd);
    q = C * V(p,n);
    I(p,n) <+ ddt(q);
  end
endmodule
```

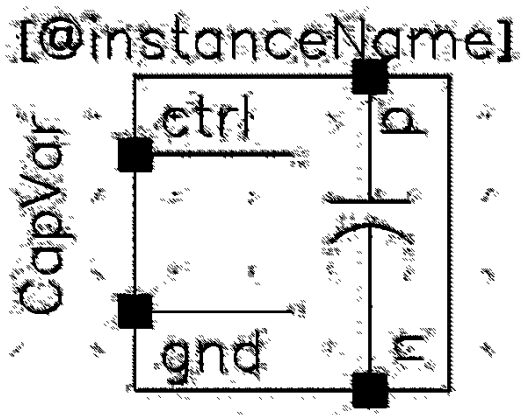

Figure 14. Cadence Symbol of Controllable Capacitor

To process the acceleration information, we need one I2V integrator that we have implemented by following the topology.

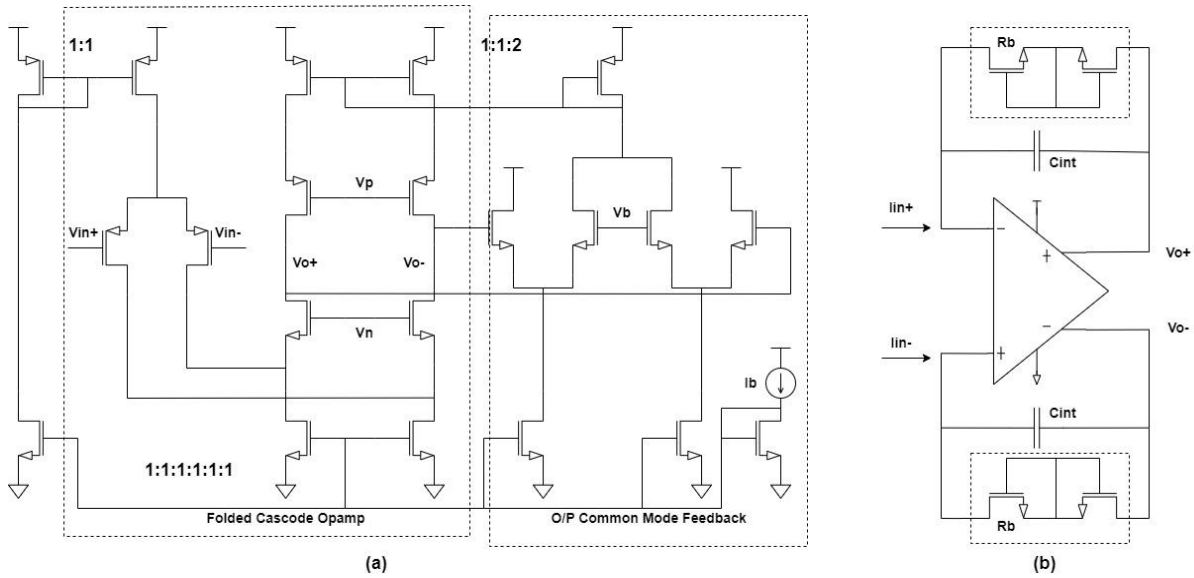

Figure 15. (a) Opamp Topology used for integrator (b) Integrator with i/p DC biased via Rb

The corresponding equations would be,

$$\frac{\Delta V_o}{\Delta I} = \frac{V_{o+} - V_{o-}}{I_{in+} - I_{in-}} = -\frac{R_b}{1 + sC_{int}R_b} \approx -\frac{1}{sC_{int}}, when\ C_{int}R_b \gg 1$$

$$\Delta V_o = -\frac{1}{sC_{int}}\Delta I = -\frac{1}{sC_{int}} \times [-s.LT\{\Delta C \times (V_s - 0.5 \times VDD)\}] = \frac{LT\{\Delta C \times (V_s - 0.5 \times VDD)\}}{C_{int}}$$

$$\Delta V_o(t) = \frac{\Delta C \times (V_s - 0.5 \times VDD)}{C_{int}} = \frac{(V_s - 0.5 \times VDD)}{C_{int}} \times \frac{2\varepsilon_0 hLx}{d^2} = \frac{(V_s - 0.5 \times VDD)}{C_{int}} \times \frac{2\varepsilon_0 hL}{d^2} \times \frac{1}{{\omega_n}^2} \times a_{ext}(t)$$

$$Because\ at\ steady\ state\ from\ \frac{X(s)}{a_{ext}(s)} = \frac{1}{s^2 + 2\zeta\omega_n s + {\omega_n}^2}, x(t) = \frac{a_{ext}(t)}{{\omega_n}^2}.$$

Here Folded Cascode topology is used to get a High i/p Common Mode(CM) range, High Gain, High Unity Gain Bandwidth, and High o/p swing. o/p Common Mode Feedback is used for fixing the o/p Common Mode(CM) to a fixed V_b = 0.6 V voltage preventing it from getting saturated due to current mismatches. So, as o/p CM is fixed to V_b, now for the integrator(Fig15.(b)) we need to bias the i/p at CM. To do so we are connecting the opamp in unity gain feedback configuration with usage of high resistance R_b(value in the range of 10GΩ) in feedback**[2]**. Such a high-valued resistance (R_b) should be realized by nmos circuits**[22]** to prevent area overhead.

d. Accelerometer Simulation Results:

i. Voltage Mode Conversion:

Fig16 Shows CM & DM Loop gain, Phase Margin, Unity Gain Bandwidth. They are 58 dB, 60 deg, 1.7 MHz (for CM Loop) & 65 dB, 68 deg, 3.8 MHz (for DM Loop). The setup for calculating these two characteristics is given in Appendix(3).

(a)

(b)

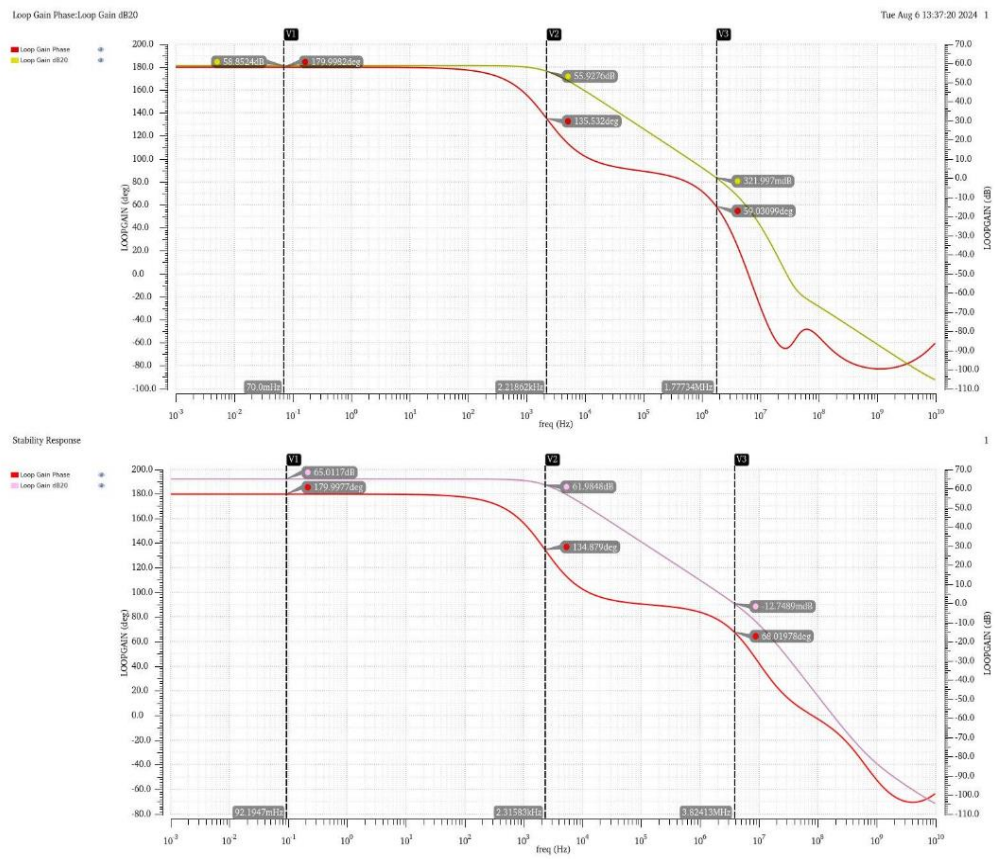

Figure 16. (a) Common Mode Feedback Loop Characteristics (b) Differential Mode Loop Characteristics

Fig17 Shows the Integrator characteristics. From the graph, we can see the integrator like behaviour between frequency 1 Hz to 100 KHz. The setup for calculating these characteristics is given in Appendix(4).

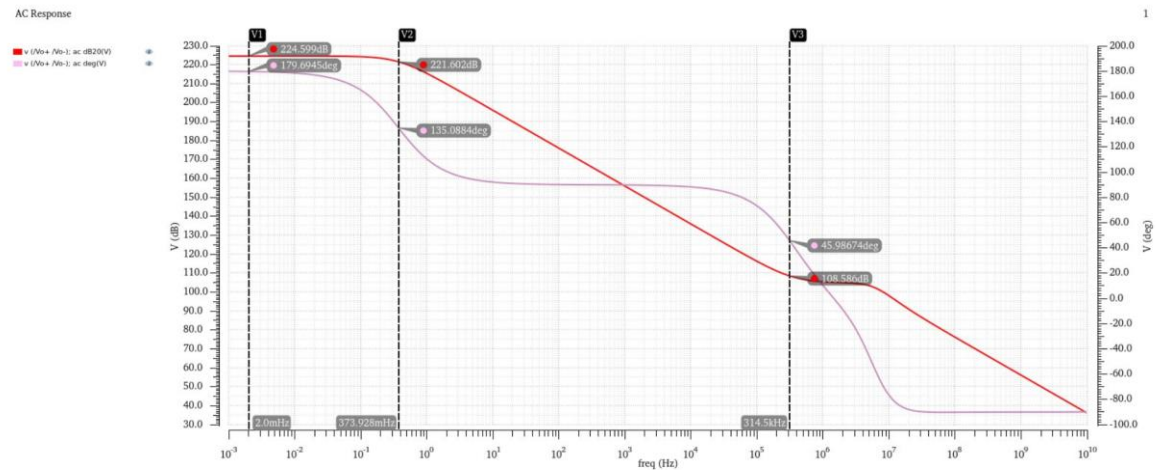

Figure 17. Differential Current to Voltage (I2V) Integrator Characteristics

Fig18 Shows the transient characteristics of the complete ASP. After the Capacitive bridge, the differential chopped current goes to the integrator. Integrator o/p is given by "/Vo+" & "Vo-"(Each having 1.5 mV p-p value). These o/p are connected to a V2I converter(Basically a source degenerated single stage differential amplifier) where the o/p nodes of V2I converter are de-chopped by a chopper and then filtered by a Low Pass Filter. Filtered Currents are given by "/R0/MINUS" & "/R1/MINUS"(Each having 7.5nA p-p value). The setup for ASP is given

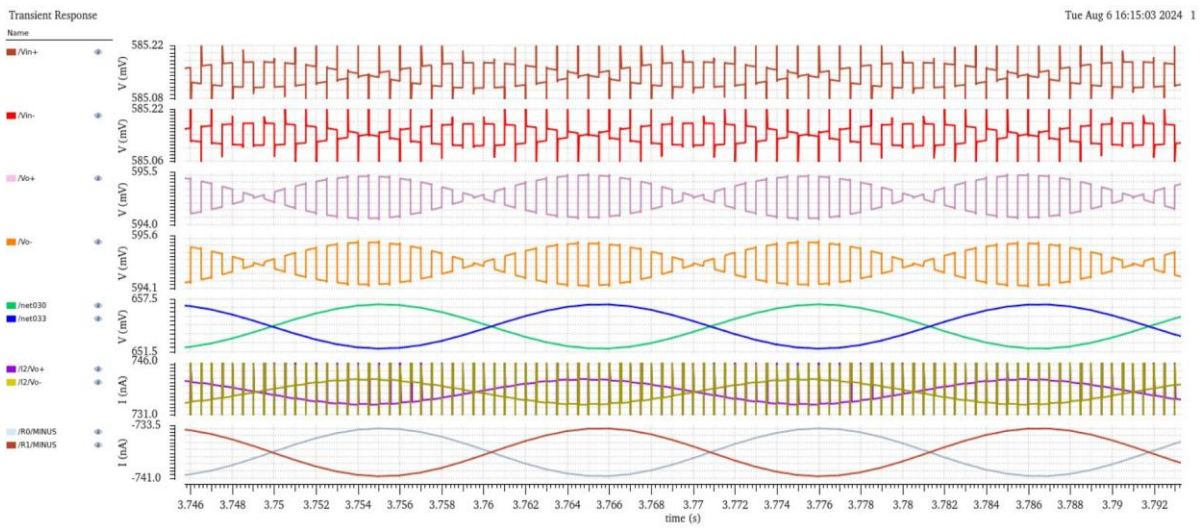

Figure 18. Transients for the Analog Signal Processing (Containing Capacitive Bridge, Integrator, V2I converter)

in the Appendix(1).

Fig19 Shows o/p referred noise of the ASP. o/p is taken from the nodes after the de-chopping chopper given in the ASP diagram in the Appendix(1). We can see that after chopping (Done with 1KHz frequency) the noise has reduced significantly.

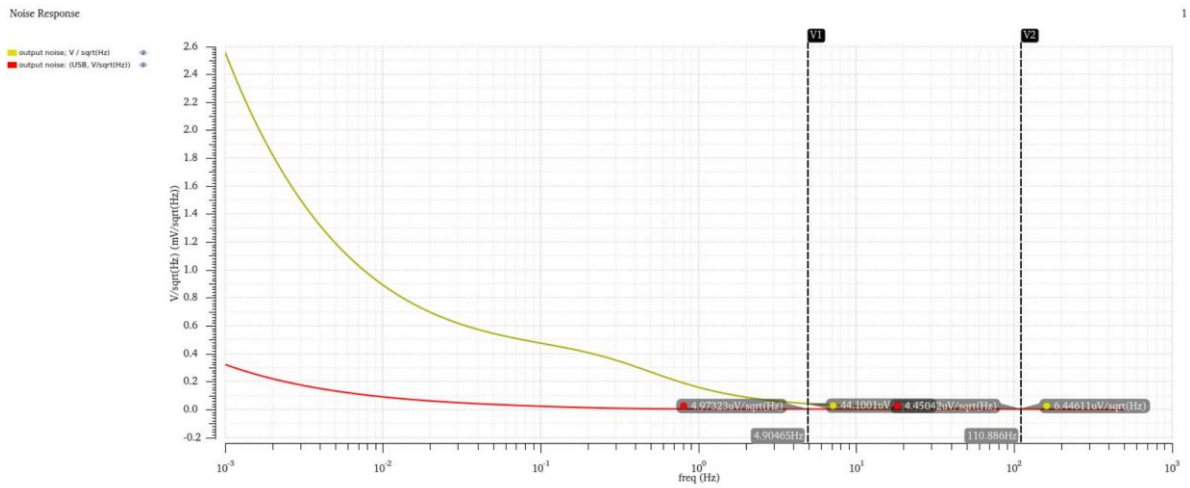

Figure 19. O/P Referred Noise with Chopper(Red) & without Chopper(Yellow)

Fig20 Represents the o/p current from the capacitive bridge shown in ASP in Appendix(1). We can see the spikes (Fig20.(a)) are changing in phase with the capacitive change. But without spike (Fig20.(b)) the behaviour has shifted 90deg from the capacitive change.

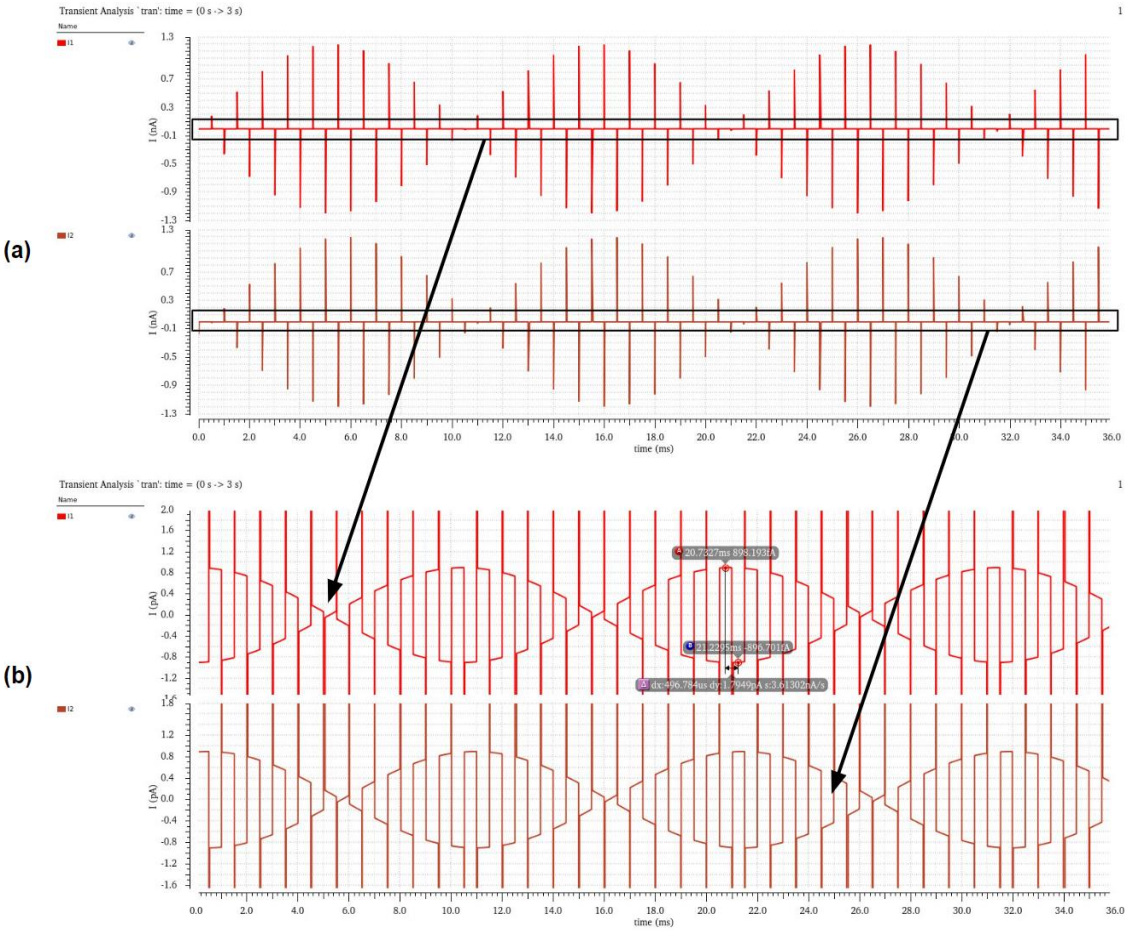

Figure 20. (a) Spikes nature of current from Capacitive Bridge o/p (b) Zoomed view of the same (a).

5. References

1. Understanding the Fundamentals of Earthquake Signal Sensing Networks Jesse Santos, Product Application Engineer, Angelo Nikko Catapang, Product Application Engineer, and Erbe D. Reyta, Hardware Application Engineer.
2. A Sub-μg Bias-Instability MEMS Oscillating Accelerometer With an Ultra-Low-Noise Read-Out Circuit in CMOS Yang Zhao, Student Member, IEEE, Jian Zhao, Student Member, IEEE, Xi Wang, Student Member, IEEE, Guo Ming Xia, An Ping Qiu, Yan Su, and Yong Ping Xu, Senior Member, IEEE.
3. A CMOS Readout Circuit for SOI Resonant Accelerometer With 4- Bias Stability and 20- Resolution Lin He, Student Member, IEEE, Yong Ping Xu, Senior Member, IEEE, and Moorthi Palani.
4. R. Kepenek, "Capacitive CMOS Readout Circuits for High Performance MEMS Accelerometers," M. S. Thesis, Middle East Technical University, Ankara, TURKEY, 2008.
5. "Sub-Femto-Farad Resolution Electronic Interfaces for Integrated Capacitive Sensors: A Review", Umberto Ferlito, (Member, IEEE), Alfio Dario Grasso, (Senior Member, IEEE), Salvatore Pennisi, (Fellow, IEEE), Michele Vaiana, and Giuseppe Bruno.
6. "MEMS Capacitive Accelerometers", Karabi Biswas, Siddhartha Sen and Pranab Kumar Dutta.
7. "Modelling and Noise Analysis of Closed-Loop Capacitive Sigma-Delta MEMS Accelerometer", Boğa, Biter M.S., Department of Electrical and Electronics Engineering Supervisor : Assoc. Prof. Dr. Haluk Külah.
8. https://www.hgsindia.com/PDF/454HG-6HS%20v1.2.pdf
9. https://www.guidelinegeo.com/help-articles/what-do-i-need-to-know-about-geophones/
10. Seismic Sensing: Comparison of Geophones and Accelerometers Using Laboratory and Field Data by Michael S. Hons, a thesis submitted to the Faculty of Graduate Studies in partial fulfilment of the requirements for the degree of Master of Science, Department of Geoscience, Calgary, Alberta, July, 2008.
11. https://www.analog.com/media/en/technical-documentation/obsolete-data-sheets/2044696adxl50.pdf
12. A High-Performance Digital Interface Circuit for a High-Q Micro-Electromechanical System Accelerometer Xiangyu Li 1, Jianping Hu 1,* and Xiaowei Liu 2.
13. Design and fabrication of SOI technology based MEMS differential capacitive accelerometer structure Nidhi Gupta1,2 · Shankar Dutta1 · Abha Panchal1 · Isha Yadav1 · Surender Kumar1 · Yashoda Parmar1 · Siva Rama Krishna Vanjari2 · K. K. Jain1 · D. K. Bhattacharya1.
14. "Design and Simulation of MEMS Differential Capacitive Accelerometer" by Soumendu Sinha, Snigdha Shakya, Ravindra Mukhiya, Ram Gopal, and B.D. Pant.
15. https://www.hgsindia.com/PDF/464HG-2%202.5Hz%20v1.0.pdf
16. https://www.hgsindia.com/Geophone.php
17. Capacitive CMOS readout circuits for high performance MEMS accelerometers, a thesis submitted to the Graduate School of Natural and Applied Sciences of Middle East Technical University by Reha Kepenek in partial fulfilment of the requirements for the degree of Master of Science in Electrical and Electronics Engineering, February 2008.
18. The performance assessment of two Aseismically designed RC school buildings after the October 23, 2011, Van, Turkey earthquake was conducted by Resat Oyguc, Ph.D., A.M.ASCE, and Evrim Guley.
19. The Walsh Transform and Empirical Mode Decomposition are applied to reconstruct velocity and displacement from seismic acceleration measurements by Qi Zhang from the Department of Civil Engineering, Tsinghua University, Beijing, and Xiang Yuan Zheng from the Division of Ocean Science and Technology, Tsinghua Shenzhen International Graduate School, with correspondence to zheng.xiangyuan@sz.tsinghua.edu.cn, received on April 9, 2020, accepted on May 13, 2020, and published on May 19, 2020.
20. "Volcano Seismology: An Introduction" by Vyacheslav M. Zobin from the Observatorio Vulcanológico, Universidad de Colima, Colima, México.
21. Landslide seismic signal recognition and mobility for an earthquake-induced rockslide in Tsaoling, Taiwan by Tien Chien Chen, Meei Ling Lin, and Kuo Lung Wang.
22. A 0.025-mm² 0.8-V 78.5-dB SNDR VCO-based sensor readout circuit in a hybrid PLL structure by Wenda Zhao, Shaolan Li, Xiangxing Yang, Linxiao Shen, Biying Xu, Xiyuan Tang, Nanshu Lu, David Z. Pan, and Nan Sun.
23. Low voltage integrators for high-frequency CMOS filters using current mode techniques by Sterling L. Smith and Edgar Sánchez-Sinencio, Fellow, IEEE.

6. Appendix:

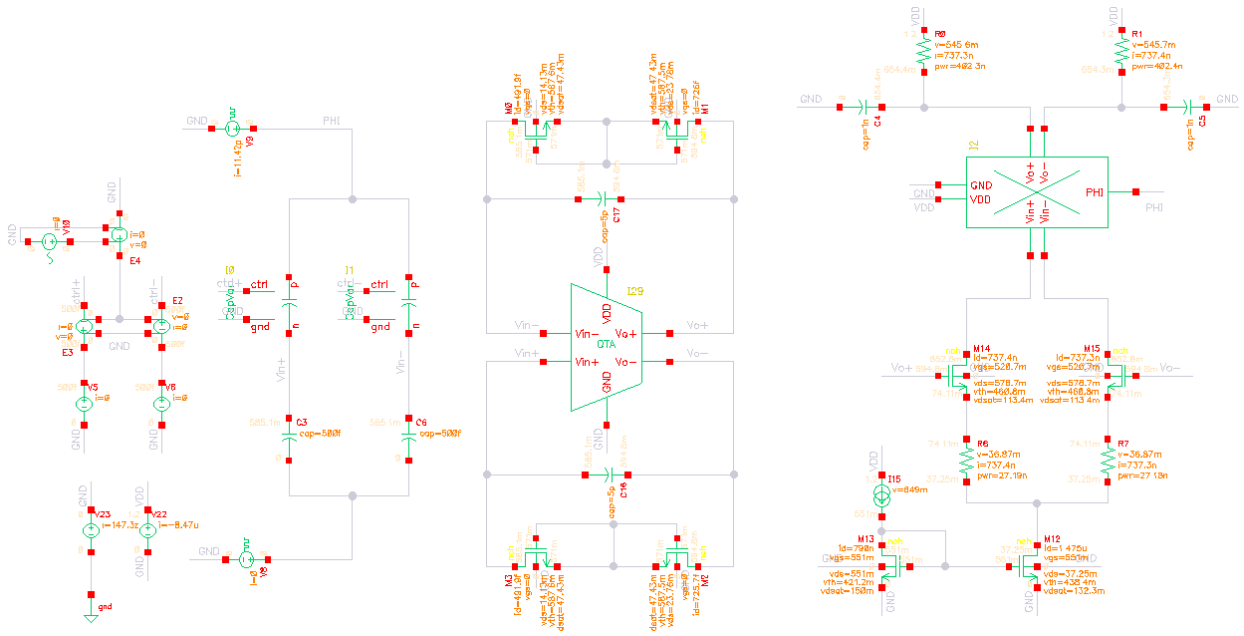

1 - ASP for Capacitive Accelerometer

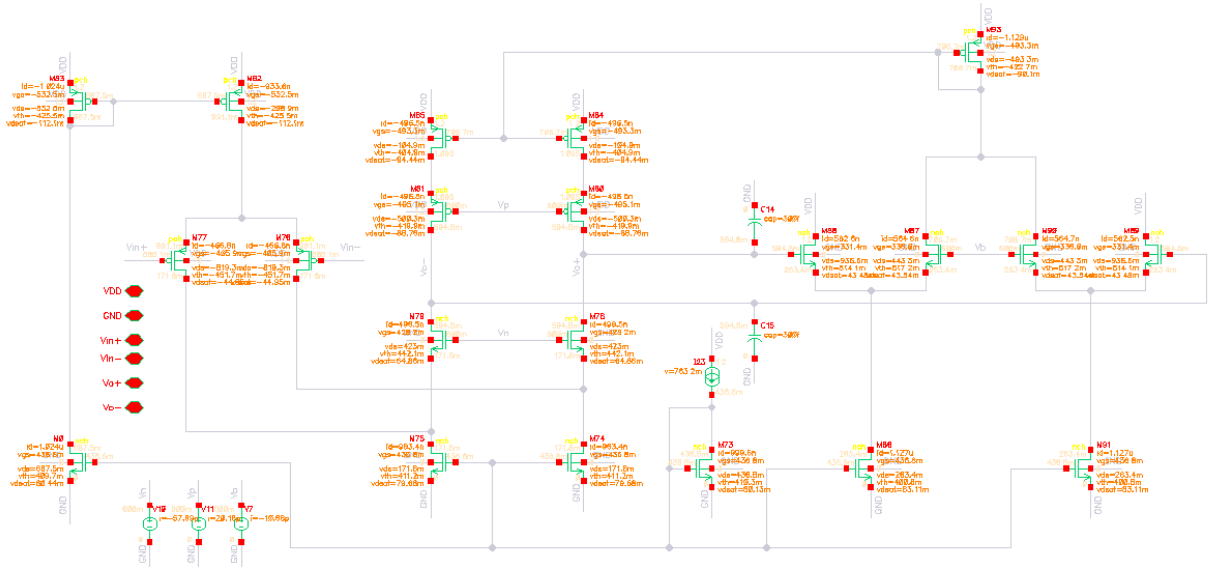

2 – OTA topology for Integrator

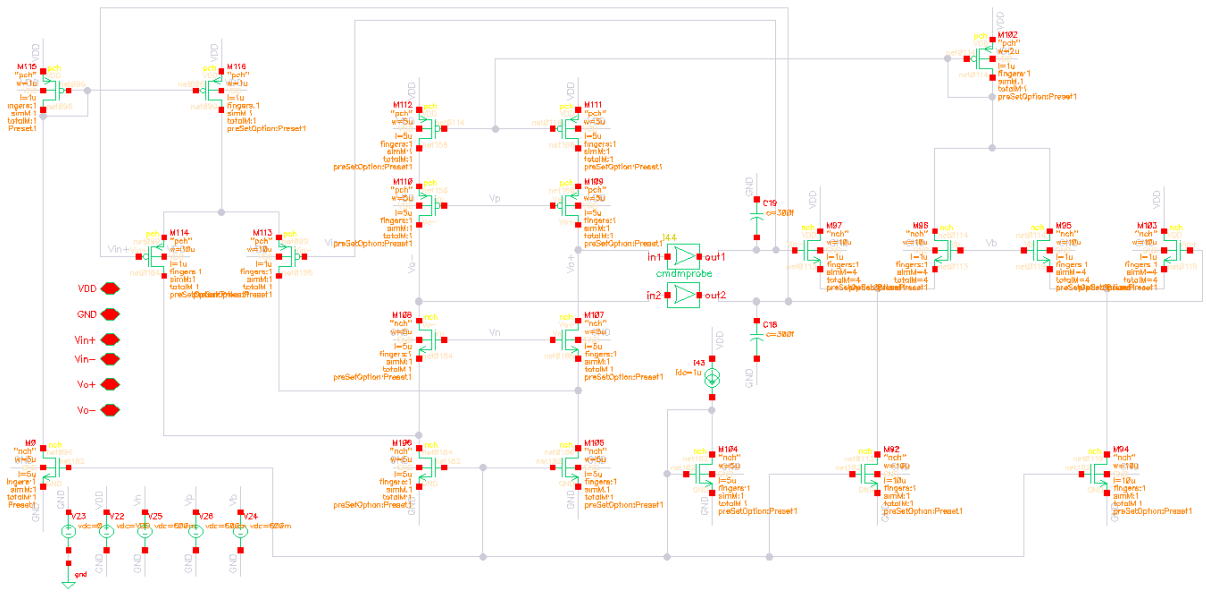

3 – Simulation set-up for calculating CM & DM Loop Gain (use of cmdmprobe)

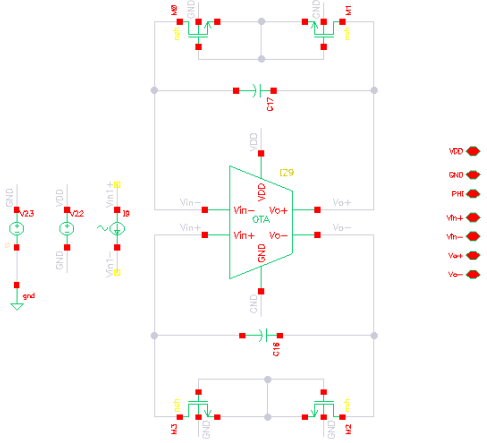

4 – Lossy Integrator Topology

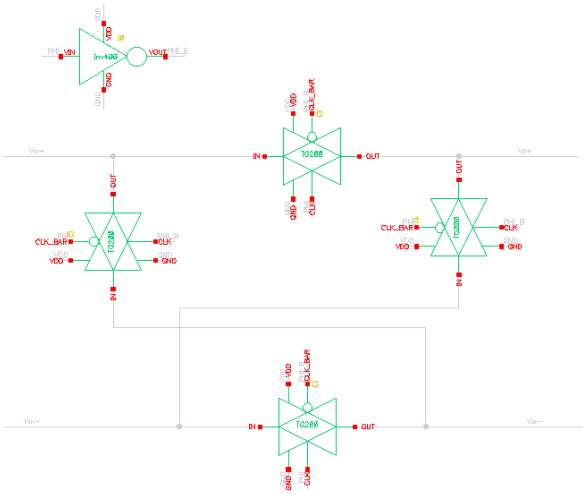

5 – Transmission Gate Topology