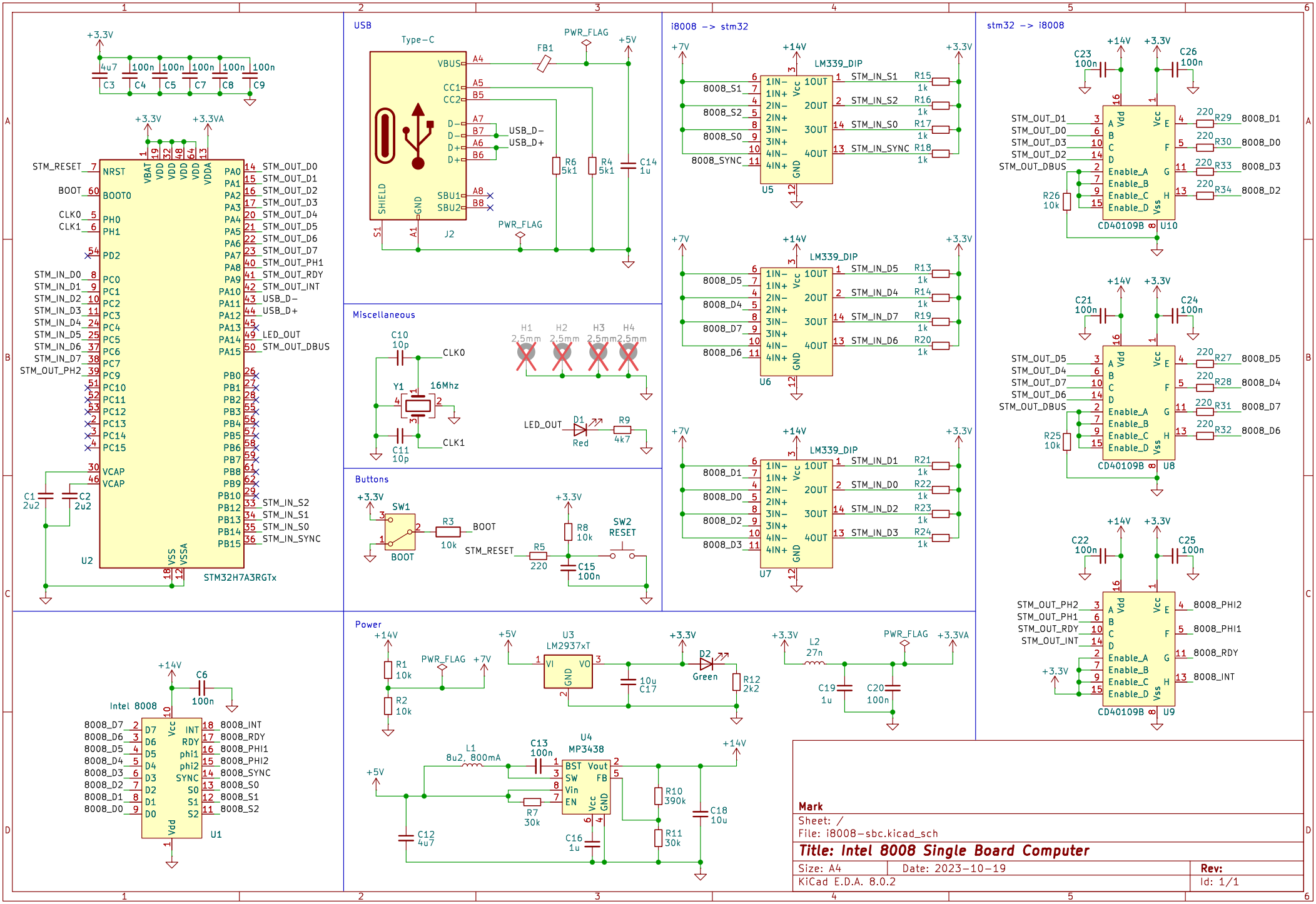
USB
Type-C
VBUS
CC1
CC2
D-
D-
D+
D+
SHIELD
GND
SBU1
SBU2
S1
A1
J2
FB1
PWR_FLAG
+5V
USB_D-
USB_D+
R6 5k1
R4 5k1
C14 1u
Miscellaneous
C10 10p
CLK0
Y1 16Mhz
C11 10p
CLK1
H1 2.5mm
H2 2.5mm
H3 2.5mm
H4 2.5mm
LED_OUT
D1 Red
R9 4k7
Buttons
+3.3V
SW1
BOOT
R3 10k
BOOT
STM_RESET
R5 220
R8 10k
C15 100n
SW2 RESET
i8008 -> stm32
+7V
+14V
+3.3V
LM339_DIP
8008_S1
8008_S2
8008_S0
8008_SYNC
STM_IN_S1
STM_IN_S2
STM_IN_S0
STM_IN_SYNC
R15 1k
R16 1k
R17 1k
R18 1k
U5
8008_D5
8008_D4
8008_D7
8008_D6
STM_IN_D5
STM_IN_D4
STM_IN_D7
STM_IN_D6
R13 1k
R14 1k
R19 1k
R20 1k
U6
8008_D1
8008_D0
8008_D2
8008_D3
STM_IN_D1
STM_IN_D0
STM_IN_D2
STM_IN_D3
R21 1k
R22 1k
R23 1k
R24 1k
U7
stm32 -> i8008
C23 100n
C26 100n
STM_OUT_D1
STM_OUT_D0
STM_OUT_D3
STM_OUT_D2
STM_OUT_DBUS
R26 10k
CD40109B
U10
8008_D1
8008_D0
8008_D3
8008_D2
R29 220
R30 220
R33 220
R34 220
C21 100n
C24 100n
STM_OUT_D5
STM_OUT_D4
STM_OUT_D7
STM_OUT_D6
R25 10k
U8
8008_D5
8008_D4
8008_D7
8008_D6
R27 220
R28 220
R31 220
R32 220
C22 100n
C25 100n
STM_OUT_PH2
STM_OUT_PH1
STM_OUT_RDY
STM_OUT_INT
U9
8008_PHI2
8008_PHI1
8008_RDY
8008_INT
STM_RESET
BOOT
CLK0
CLK1
STM_IN_D0
STM_IN_D1
STM_IN_D2
STM_IN_D3
STM_IN_D4
STM_IN_D5
STM_IN_D6
STM_IN_D7
STM_OUT_PH2
STM_OUT_D0
STM_OUT_D1
STM_OUT_D2
STM_OUT_D3
STM_OUT_D4
STM_OUT_D5
STM_OUT_D6
STM_OUT_D7
STM_OUT_PH1
STM_OUT_RDY
STM_OUT_INT
STM_OUT_DBUS
LED_OUT
USB_D-
USB_D+
STM_IN_S2
STM_IN_S1
STM_IN_S0
STM_IN_SYNC
C1 2u2
C2 2u2
U2
STM32H7A3RGTx
Intel 8008
C6 100n
8008_D7
8008_D6
8008_D5
8008_D4
8008_D3
8008_D2
8008_D1
8008_D0
8008_INT
8008_RDY
8008_PHI1
8008_PHI2
8008_SYNC
8008_S0
8008_S1
8008_S2
U1
Power
R1 10k
R2 10k
PWR_FLAG
+7V
U3 LM2937xT
VI
VO
GND
10u C17
D2 Green
R12 2k2
L2 27n
C19 1u
C20 100n
+3.3VA
L1 8u2, 800mA
C13 100n
U4 MP3438
BST
SW
Vin
EN
Vout
FB
R7 30k
C12 4u7
C16 1u
R10 390k
R11 30k
C18 10u
Mark
Sheet: /
File: i8008-sbc.kicad_sch
Title: Intel 8008 Single Board Computer
Size: A4
Date: 2023-10-19
Rev:
KiCad E.D.A. 8.0.2
Id: 1/1