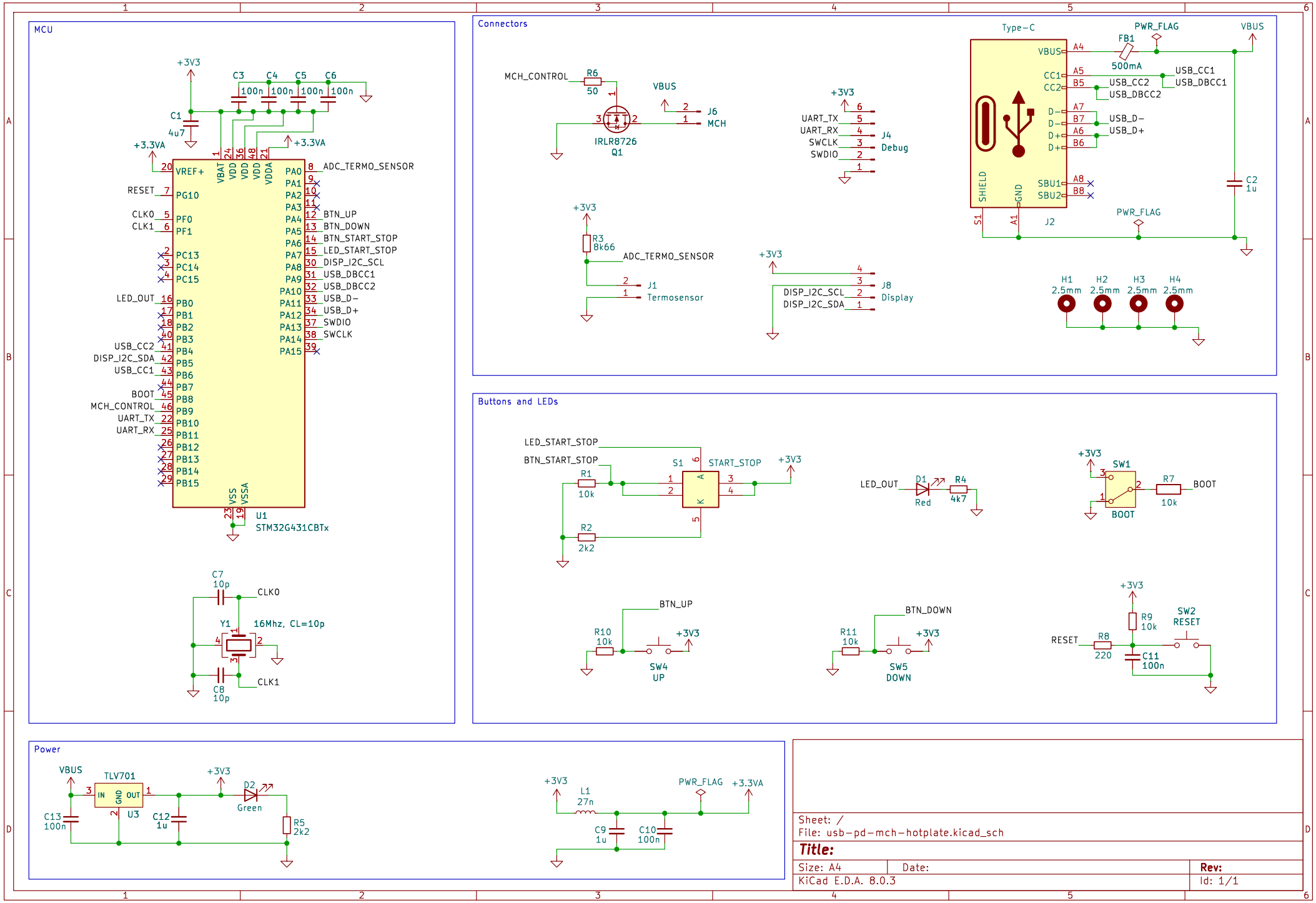
MCU
+3V3
C1 4u7
C3 100n
C4 100n
C5 100n
C6 100n
+3.3VA
VREF+ 20
RESET PG10 7
CLK0 PF0 5
CLK1 PF1 6
PC13 2
PC14 3
PC15 4
LED_OUT PB0 16
PB1 17
PB2 18
PB3 40
USB_CC2 PB4 41
DISP_I2C_SDA PB5 42
USB_CC1 PB6 43
PB7 44
BOOT PB8 45
MCH_CONTROL PB9 46
UART_TX PB10 22
UART_RX PB11 25
PB12 26
PB13 27
PB14 28
PB15 29
VBAT 1
VDD 24
VDD 36
VDD 48
VDD 21
VDDA
VSS 23
VSSA 19
PA0 8 ADC_TERMO_SENSOR
PA1 9
PA2 10
PA3 11
PA4 12 BTN_UP
PA5 13 BTN_DOWN
PA6 14 BTN_START_STOP
PA7 15 LED_START_STOP
PA8 30 DISP_I2C_SCL
PA9 31 USB_DBCC1
PA10 32 USB_DBCC2
PA11 33 USB_D−
PA12 34 USB_D+
PA13 37 SWDIO
PA14 38 SWCLK
PA15 39
U1
STM32G431CBTx
C7 10p
CLK0
Y1 16Mhz, CL=10p
C8 10p
CLK1
Connectors
MCH_CONTROL
R6 50
IRLR8726
Q1
VBUS
J6
MCH
+3V3
UART_TX 6
UART_RX 5
SWCLK 4
SWDIO 3
2
1
J4
Debug
+3V3
R3 8k66
ADC_TERMO_SENSOR
J1
Termosensor
+3V3
4
3
DISP_I2C_SCL 2
DISP_I2C_SDA 1
J8
Display
Type−C
PWR_FLAG
VBUS
FB1
500mA
VBUS A4
CC1 A5
CC2 B5
USB_CC1
USB_DBCC1
USB_CC2
USB_DBCC2
D− A7
D− B7
D+ A6
D+ B6
USB_D−
USB_D+
SBU1 A8
SBU2 B8
SHIELD
GND
S1
A1
J2
C2 1u
PWR_FLAG
H1 2.5mm
H2 2.5mm
H3 2.5mm
H4 2.5mm
Buttons and LEDs
LED_START_STOP
BTN_START_STOP
R1 10k
S1
START_STOP
+3V3
R2 2k2
LED_OUT
D1 Red
R4 4k7
+3V3
SW1
R7 10k
BOOT
BOOT
BTN_UP
R10 10k
+3V3
SW4 UP
BTN_DOWN
R11 10k
+3V3
SW5 DOWN
+3V3
R9 10k
SW2 RESET
RESET
R8 220
C11 100n
Power
VBUS
TLV701
IN GND OUT
U3
C13 100n
C12 1u
+3V3
D2 Green
R5 2k2
+3V3
L1 27n
C9 1u
C10 100n
PWR_FLAG
+3.3VA
Sheet: /
File: usb−pd−mch−hotplate.kicad_sch
Title:
Size: A4
Date:
Rev:
KiCad E.D.A. 8.0.3
Id: 1/1