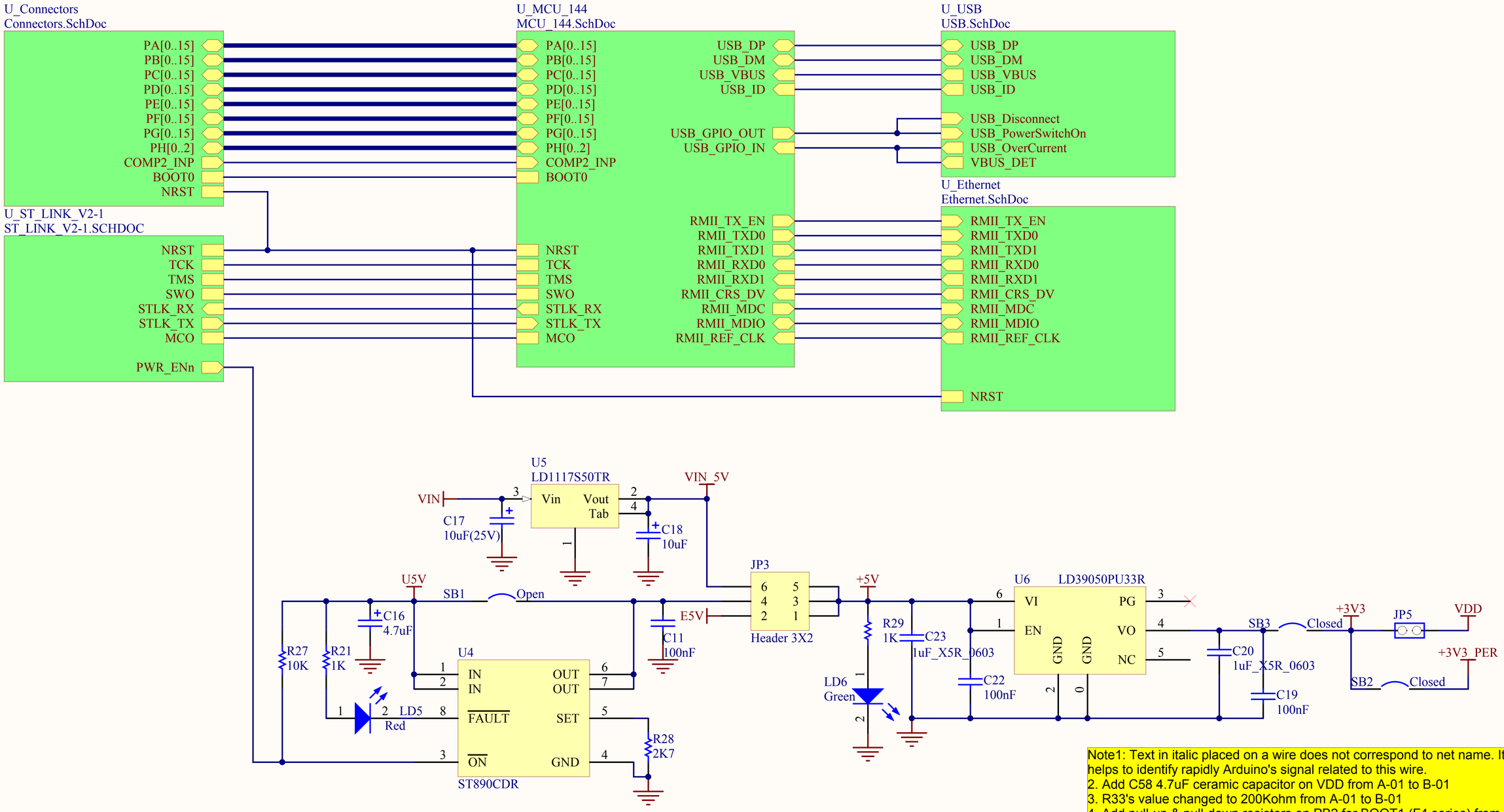

Power Switch to supply +5V
from STLINK USB

Note1: Text in italic placed on a wire does not correspond to net name. It just helps to identify rapidly Arduino's signal related to this wire.
2. Add C58 4.7uF ceramic capacitor on VDD from A-01 to B-01
3. R33's value changed to 200Kohm from A-01 to B-01
4. Add pull-up & pull-down resistors on PB2 for BOOT1 (F4 series) from A-01 to B-01
5. All peripherals' power changed to +3V3_PER from A-01 to B-01
6. C36 & C37's value changed to 2pF from A-01 to B-01
7. Add R76 1.5K pull-up circuit to USB_DP for F303ZE only from A-01 to B-01
8. LD1 can be controlled by PB0 from A-01 to B-01
9. D11 on CN7 can be set to PB5 from A-01 to B-01

Title: **TOP & POWER**		
Project: **NUCLEO-XXXXZX**		
Size: A4	Reference: MB1137	Revision: B-01
Date: 12/2/2015		Sheet: 1 of 6

life.augmented

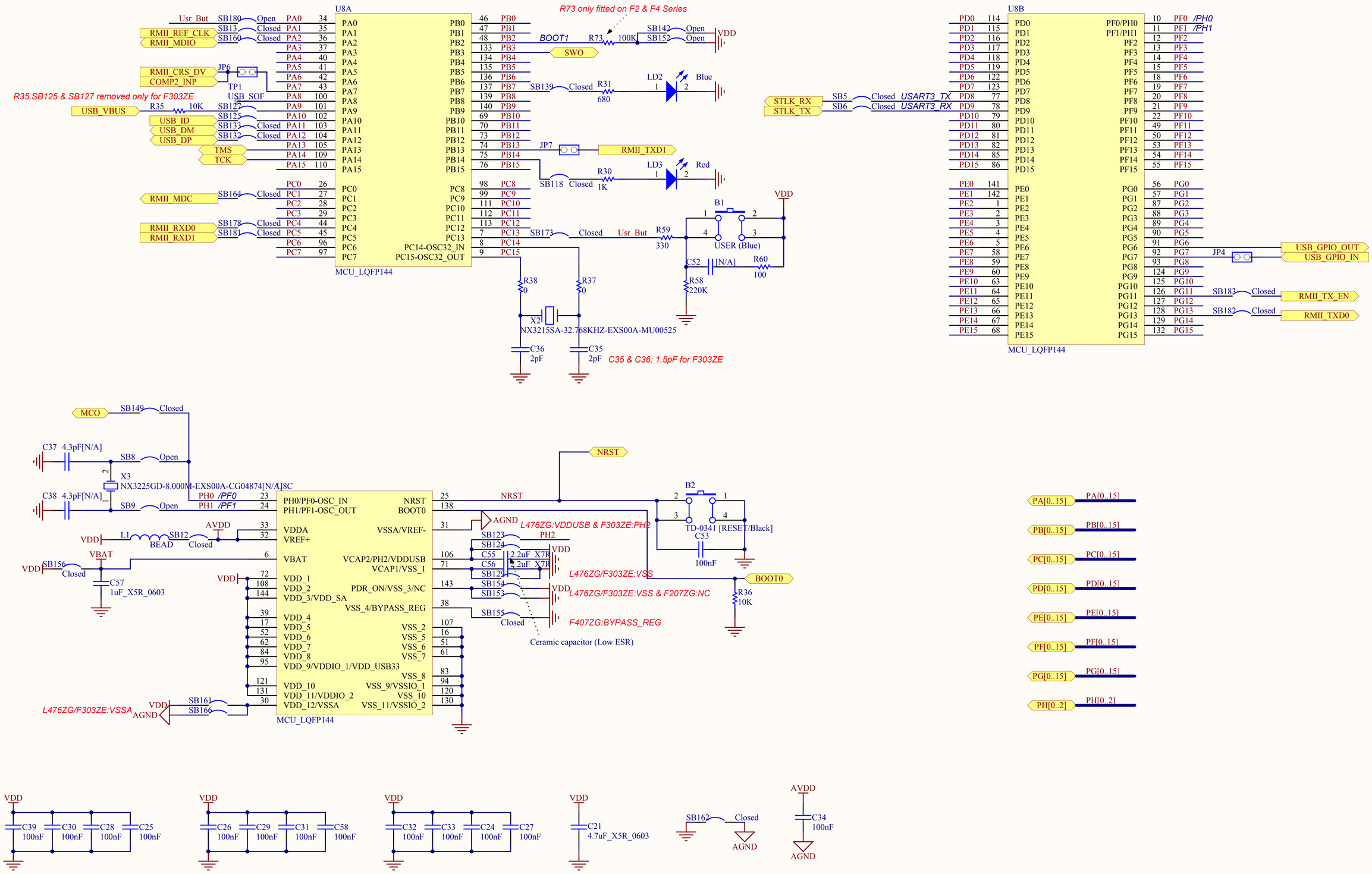

Title: **MCU**		
Project: **NUCLEO-XXXXZX**		
Size: A3	Reference: MB1137	Revision: B-01
Date: 10/13/2015		Sheet: 2 of 6

life.augmented

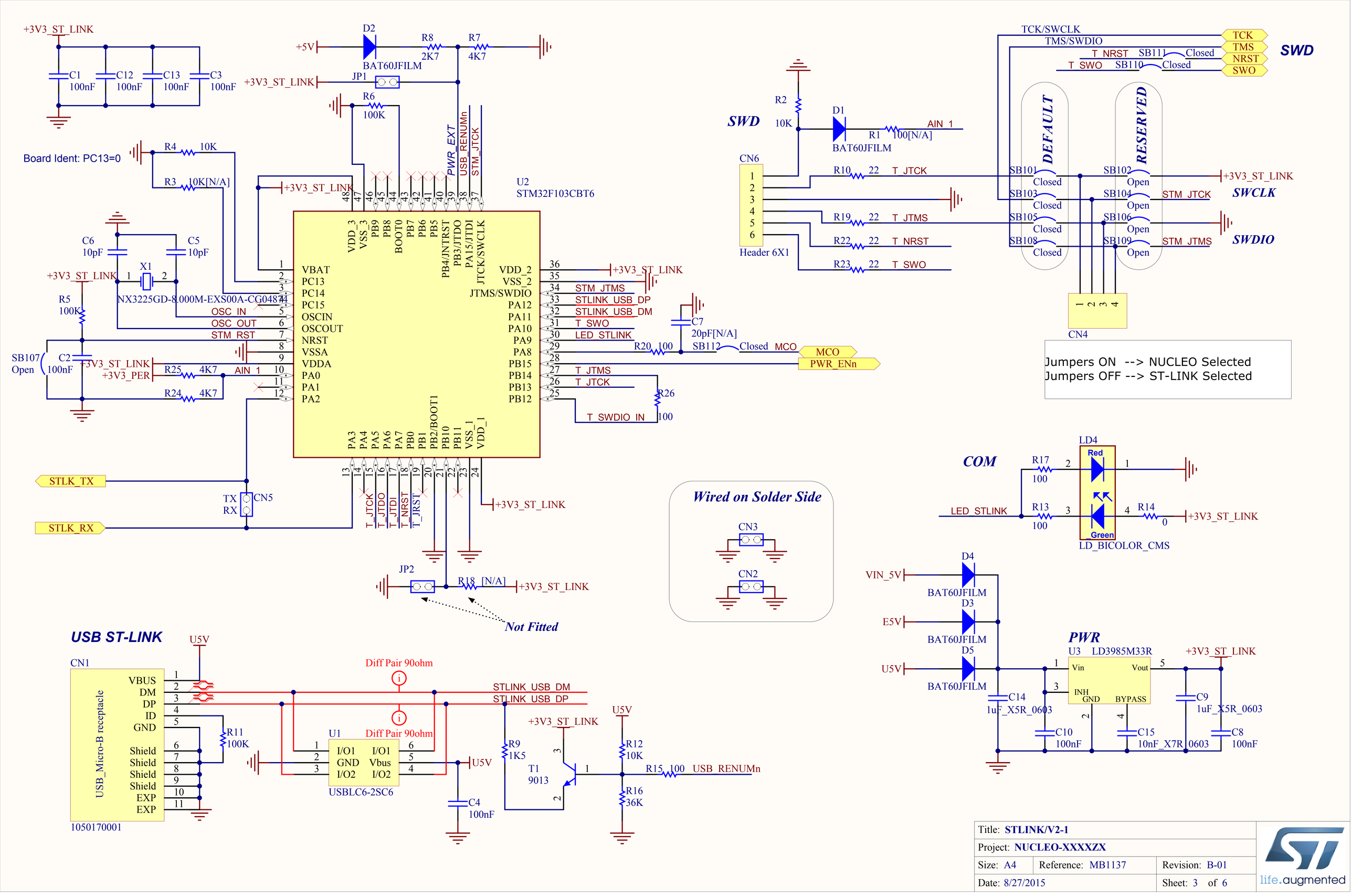

Title: **STLINK/V2-1**		
Project: **NUCLEO-XXXXZX**		
Size: A4	Reference: MB1137	Revision: B-01
Date: 8/27/2015		Sheet: 3 of 6

life.augmented

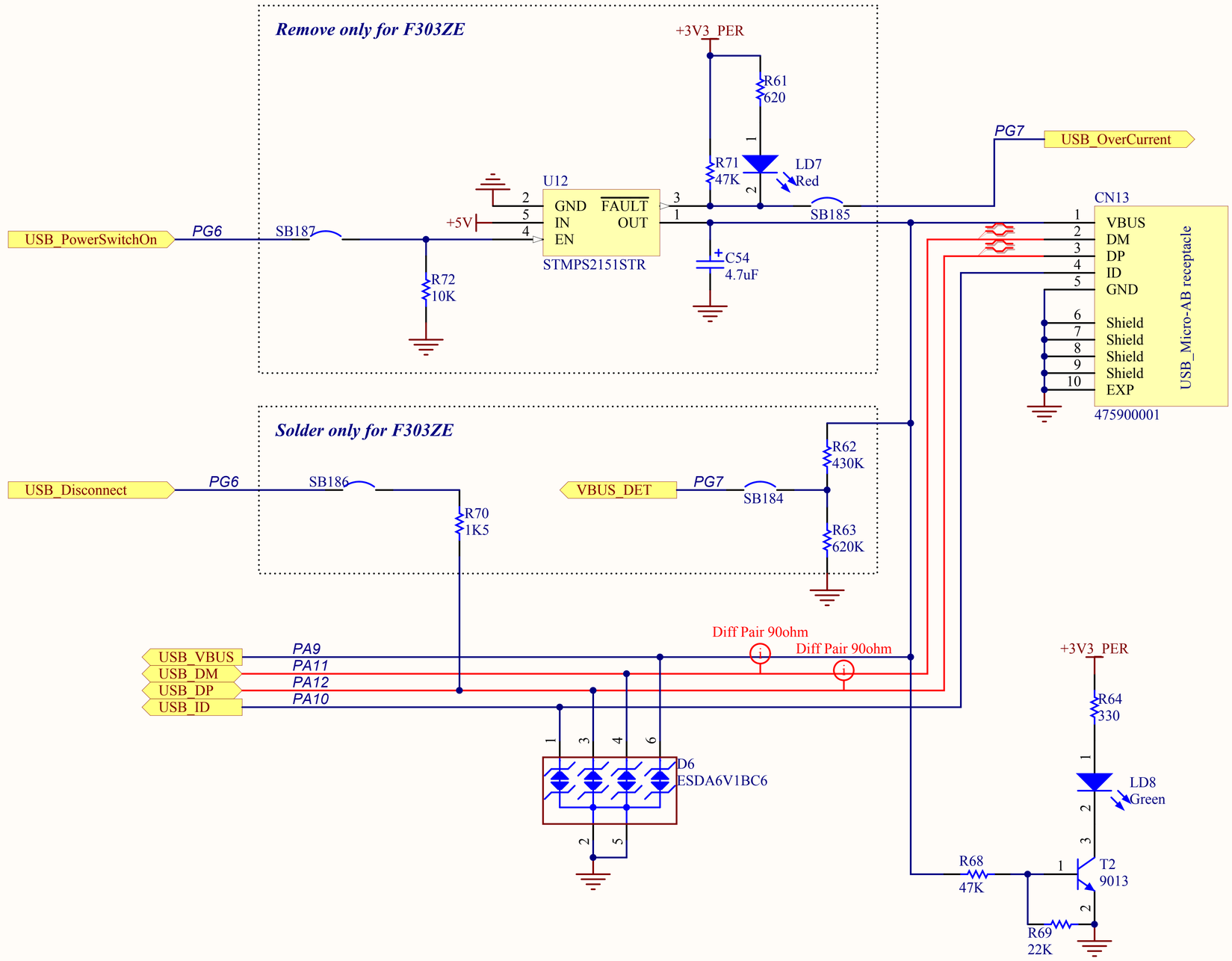

Title: **USB**		
Project: **NUCLEO-XXXXZX**		
Size: A4	Reference: MB1137	Revision: B-01
Date: 8/24/2015		Sheet: 4 of 6

life.augmented

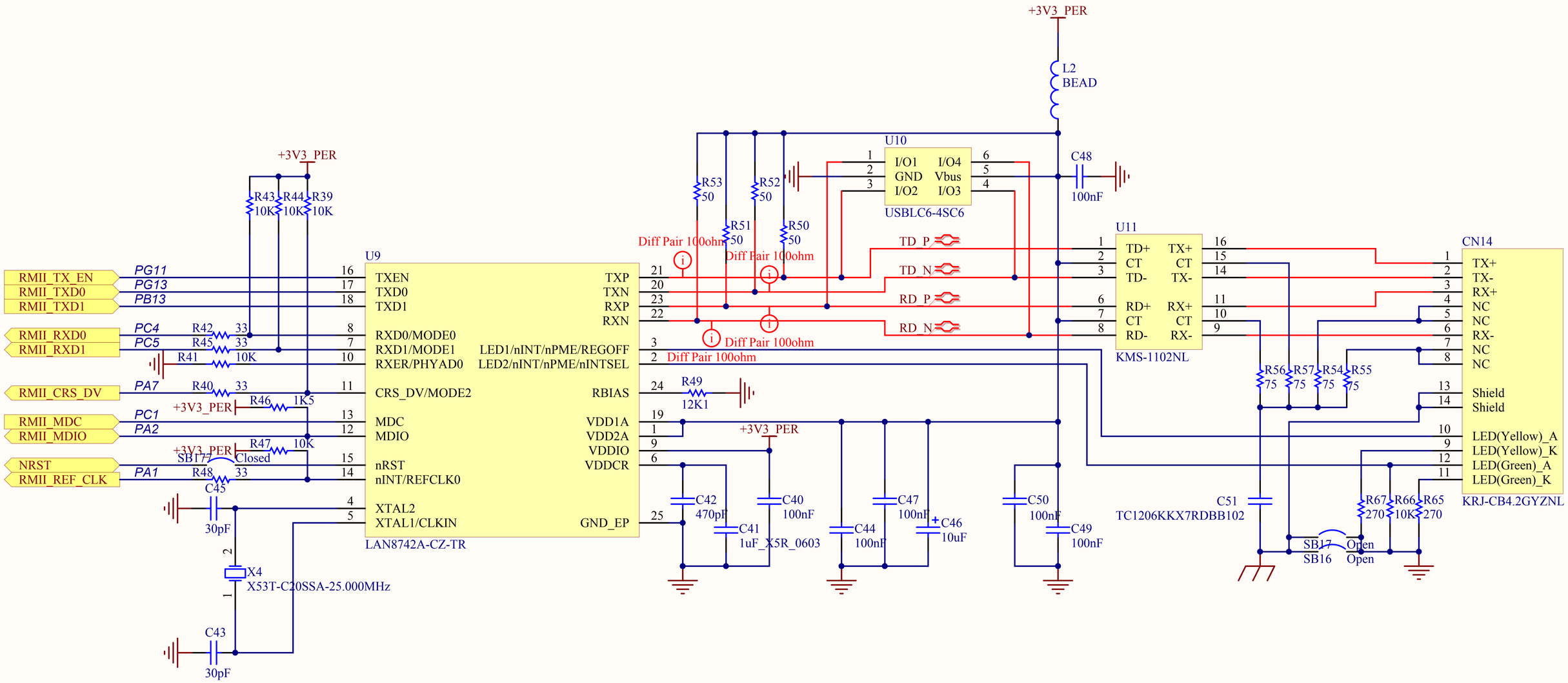

Title: **Ethernet PHY with RJ45 connector**		
Project: **NUCLEO-XXXXZX**		
Size: A4	Reference: MB1137	Revision: B-01
Date: 8/27/2015		Sheet: 5 of 6

life.augmented

Extension connectors

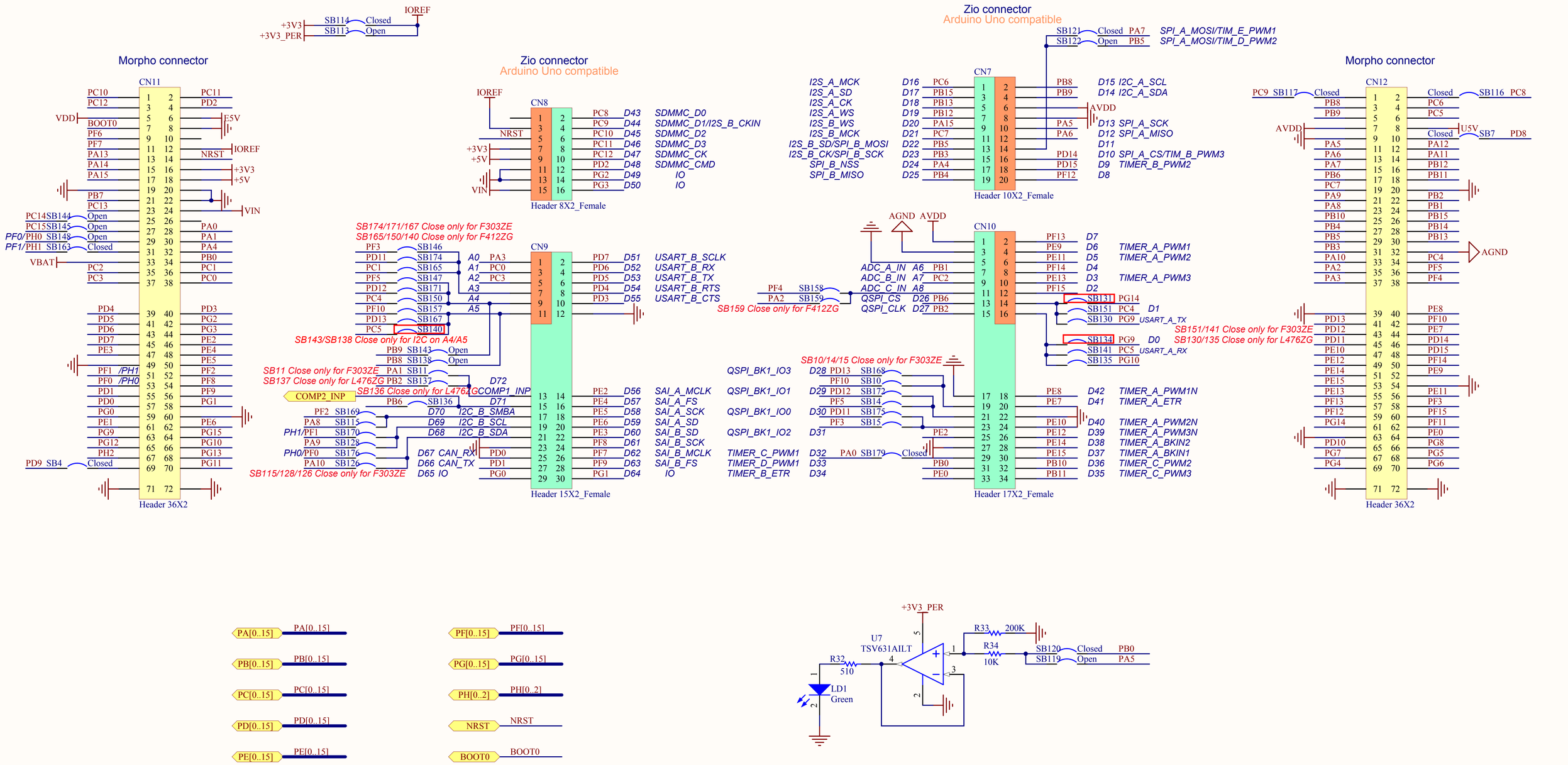

Title: **Extension connectors**		
Project: **NUCLEO-XXXXZX**		
Size: A3	Reference: MB1137	Revision: B-01
Date: 12/2/2015		Sheet: 6 of 6

life.augmented