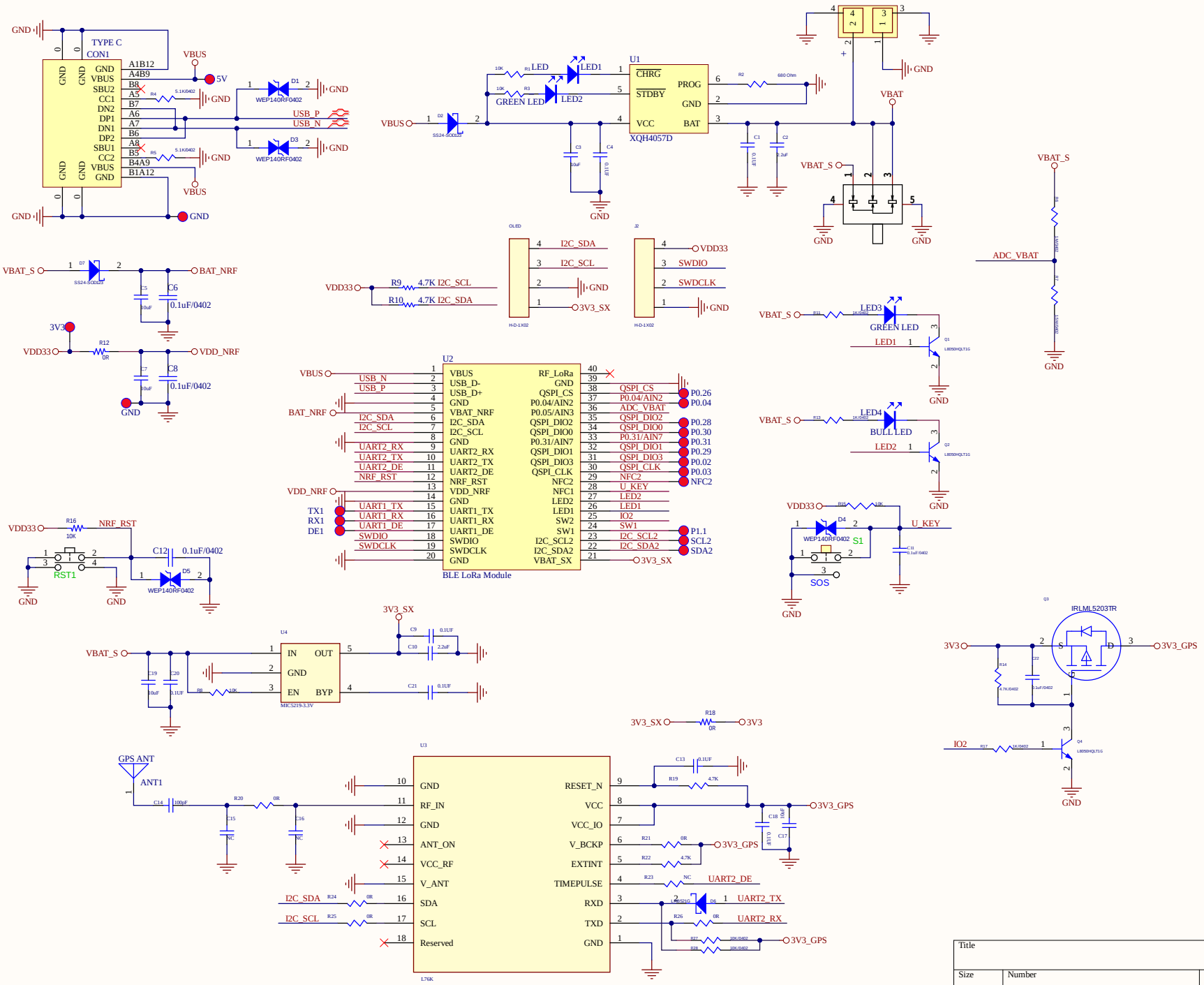

Title		
Size A3	Number	Revision
Date: 5/05/2025	Sheet of	
File: E:\加特物联\..\GAT562 Mesh Trial Tracker V1.3.PcbDoc	Drawn by:	