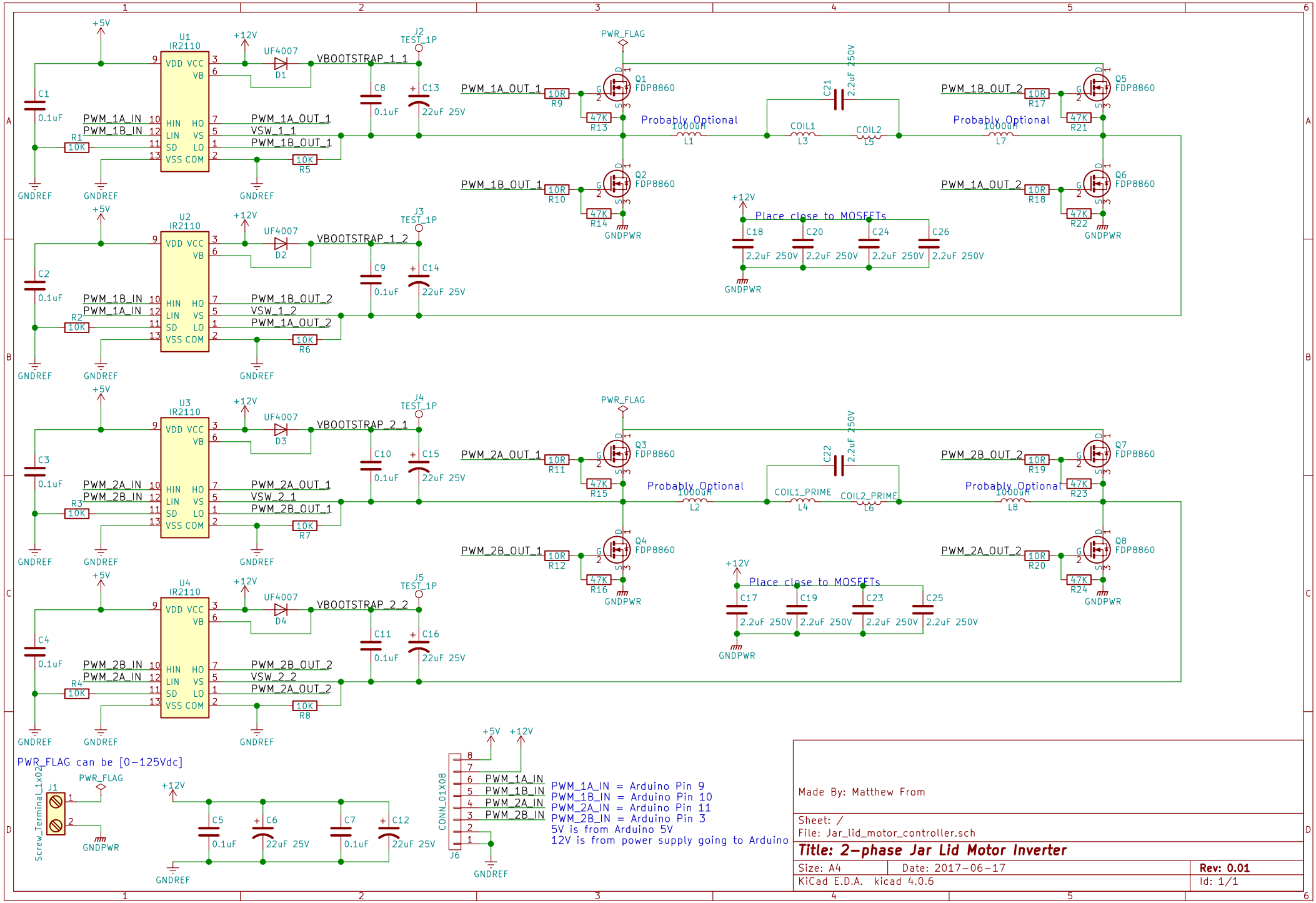
U1 IR2110
U2 IR2110
U3 IR2110
U4 IR2110
VDD VCC VB HIN HO LIN VS SD LO VSS COM
+5V
+12V
UF4007
D1
D2
D3
D4
VBOOTSTRAP_1_1
VBOOTSTRAP_1_2
VBOOTSTRAP_2_1
VBOOTSTRAP_2_2
J2 TEST_1P
J3 TEST_1P
J4 TEST_1P
J5 TEST_1P
PWM_1A_IN
PWM_1B_IN
PWM_2A_IN
PWM_2B_IN
PWM_1A_OUT_1
VSW_1_1
PWM_1B_OUT_1
PWM_1B_OUT_2
VSW_1_2
PWM_1A_OUT_2
PWM_2A_OUT_1
VSW_2_1
PWM_2B_OUT_1
PWM_2B_OUT_2
VSW_2_2
PWM_2A_OUT_2
C1 0.1uF
C2 0.1uF
C3 0.1uF
C4 0.1uF
C8 0.1uF
C9 0.1uF
C10 0.1uF
C11 0.1uF
C13 22uF 25V
C14 22uF 25V
C15 22uF 25V
C16 22uF 25V
R1 10K
R2 10K
R3 10K
R4 10K
R5 10K
R6 10K
R7 10K
R8 10K
GNDREF
PWR_FLAG
Q1 FDP8860
Q2 FDP8860
Q3 FDP8860
Q4 FDP8860
Q5 FDP8860
Q6 FDP8860
Q7 FDP8860
Q8 FDP8860
R9 10R
R10 10R
R11 10R
R12 10R
R13 47K
R14 47K
R15 47K
R16 47K
R17 10R
R18 10R
R19 10R
R20 10R
R21 47K
R22 47K
R23 47K
R24 47K
GNDPWR
Probably Optional
1000uH
L1
L2
L7
L8
COIL1
L3
COIL2
L5
COIL1_PRIME
L4
COIL2_PRIME
L6
C21 2.2uF 250V
C22 2.2uF 250V
Place close to MOSFETs
C18 2.2uF 250V
C20 2.2uF 250V
C24 2.2uF 250V
C26 2.2uF 250V
C17 2.2uF 250V
C19 2.2uF 250V
C23 2.2uF 250V
C25 2.2uF 250V
PWR_FLAG can be [0-125Vdc]
J1 Screw_Terminal_1x02
C5 0.1uF
C6 22uF 25V
C7 0.1uF
C12 22uF 25V
J6 CONN_01X08
PWM_1A_IN = Arduino Pin 9
PWM_1B_IN = Arduino Pin 10
PWM_2A_IN = Arduino Pin 11
PWM_2B_IN = Arduino Pin 3
5V is from Arduino 5V
12V is from power supply going to Arduino
Made By: Matthew From
Sheet: /
File: Jar_lid_motor_controller.sch
Title: 2-phase Jar Lid Motor Inverter
Size: A4
Date: 2017-06-17
Rev: 0.01
KiCad E.D.A. kicad 4.0.6
Id: 1/1