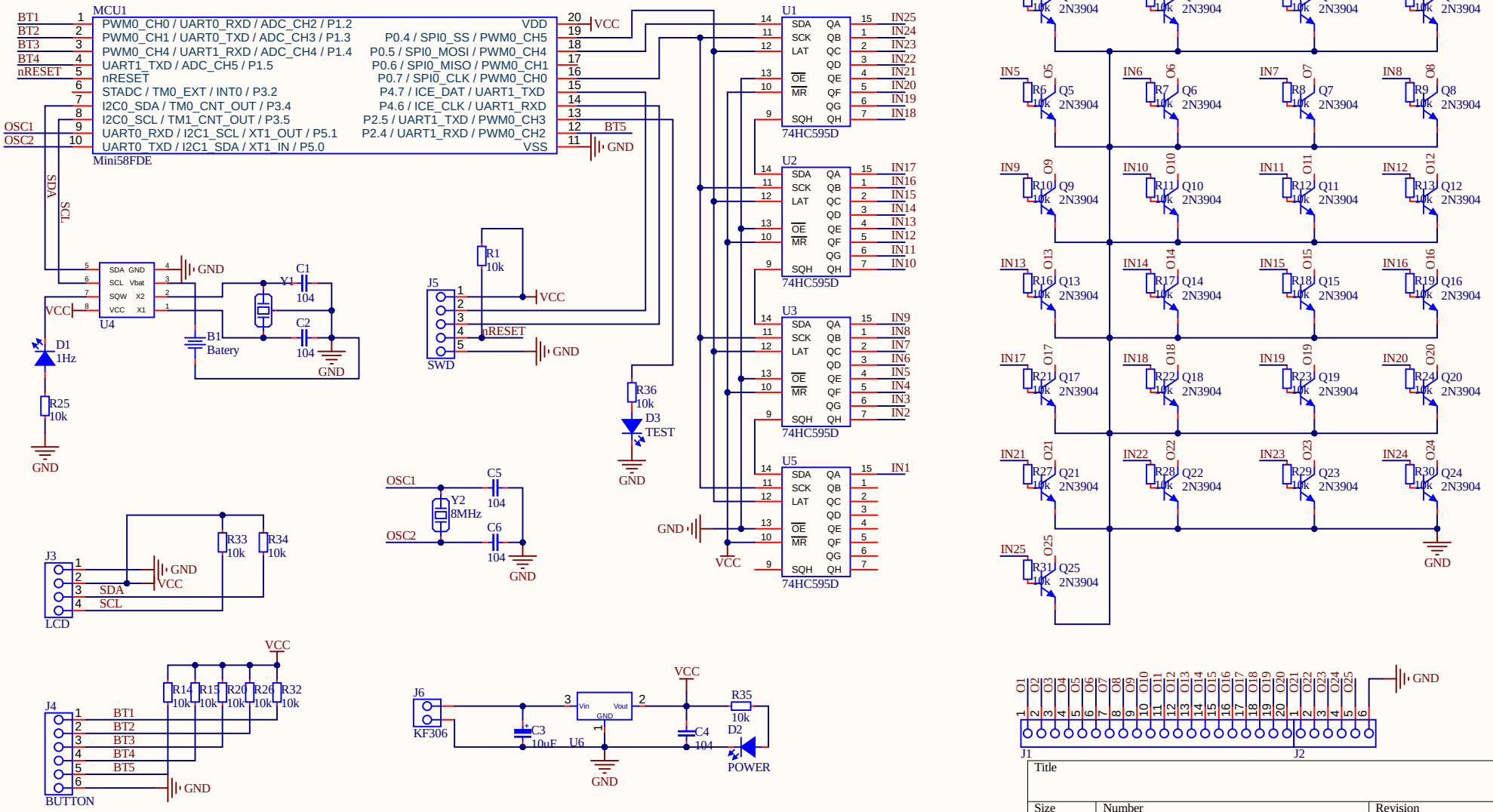
MCU1
Mini58FDE
PWM0_CH0 / UART0_RXD / ADC_CH2 / P1.2
PWM0_CH1 / UART0_TXD / ADC_CH3 / P1.3
PWM0_CH4 / UART1_RXD / ADC_CH4 / P1.4
UART1_TXD / ADC_CH5 / P1.5
nRESET
STADC / TM0_EXT / INT0 / P3.2
I2C0_SDA / TM0_CNT_OUT / P3.4
I2C0_SCL / TM1_CNT_OUT / P3.5
UART0_RXD / I2C1_SCL / XT1_OUT / P5.1
UART0_TXD / I2C1_SDA / XT1_IN / P5.0
VDD
P0.4 / SPI0_SS / PWM0_CH5
P0.5 / SPI0_MOSI / PWM0_CH4
P0.6 / SPI0_MISO / PWM0_CH1
P0.7 / SPI0_CLK / PWM0_CH0
P4.7 / ICE_DAT / UART1_TXD
P4.6 / ICE_CLK / UART1_RXD
P2.5 / UART1_TXD / PWM0_CH3
P2.4 / UART1_RXD / PWM0_CH2
VSS
BT1
BT2
BT3
BT4
nRESET
OSC1
OSC2
VCC
BT5
GND
SDA
SCL
U4
B1
Batery
Y1
C1
C2
104
D1
1Hz
R25
10k
J5
SWD
R1
nRESET
R36
D3
TEST
U1
U2
U3
U5
74HC595D
SDA
SCK
LAT
OE
MR
SQH
QA
QB
QC
QD
QE
QF
QG
QH
IN1
IN2
IN3
IN4
IN5
IN6
IN7
IN8
IN9
IN10
IN11
IN12
IN13
IN14
IN15
IN16
IN17
IN18
IN19
IN20
IN21
IN22
IN23
IN24
IN25
O1
O2
O3
O4
O5
O6
O7
O8
O9
O10
O11
O12
O13
O14
O15
O16
O17
O18
O19
O20
O21
O22
O23
O24
O25
Q1
Q2
Q3
Q4
Q5
Q6
Q7
Q8
Q9
Q10
Q11
Q12
Q13
Q14
Q15
Q16
Q17
Q18
Q19
Q20
Q21
Q22
Q23
Q24
Q25
2N3904
R2
R3
R4
R5
R6
R7
R8
R9
R10
R11
R12
R13
R16
R17
R18
R19
R21
R22
R23
R24
R27
R28
R29
R30
R31
J3
LCD
R33
R34
J4
BUTTON
R14
R15
R20
R26
R32
J6
KF306
C3
10uF
U6
C4
R35
D2
POWER
J1
J2
Title
Size
A4
Number
Revision
Date:
5/22/2022
Sheet of
File:
D:\PROJECTS_2022\..\ControlBoard.SchDoc
Drawn By:

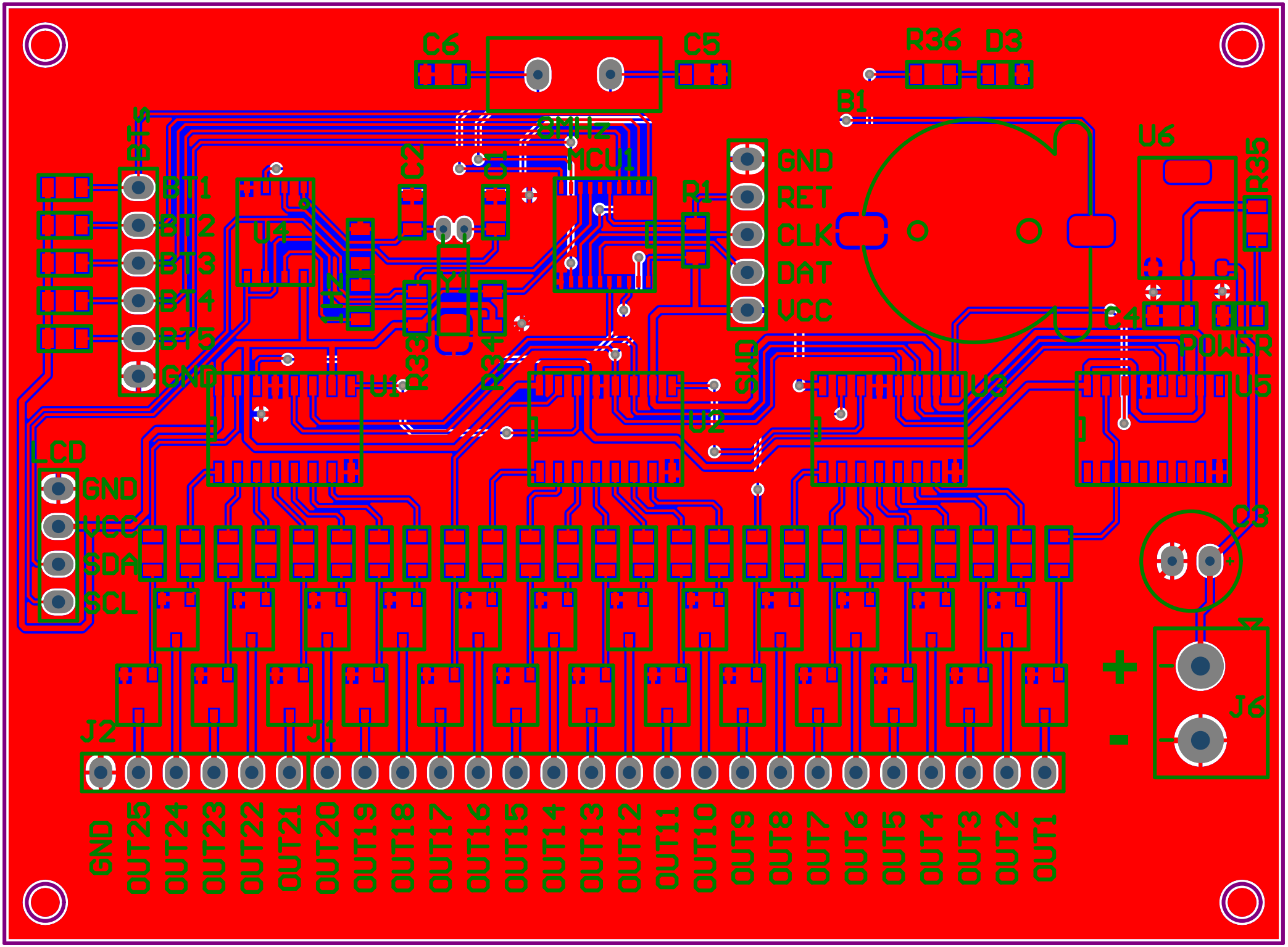
C6
C5
R36
D3
B1
U6
R35
GND
RET
CLK
DAT
VCC
R1
C2
C1
NCU1
U1
R33
C14
U2
U3
U5
C4
POWER
LCD
GND
VCC
SDA
SCL
C3
J6
J2
J1
GND
OUT25
OUT24
OUT23
OUT22
OUT21
OUT20
OUT19
OUT18
OUT17
OUT16
OUT15
OUT14
OUT13
OUT12
OUT11
OUT10
OUT9
OUT8
OUT7
OUT6
OUT5
OUT4
OUT3
OUT2
OUT1

Comment	Description	Designator	Footprint	LibRef	Quantity
Batery		B1	CR1220	Batery	1
104		C1, C2, C4, C5, C6	C0805	Capacitors(SMD)	5
10uF		C3	CAP_RAD_D06.3x11	Capacitor(Radian)	1
1Hz		D1	L0805RED	LED0805	1
POWER		D2	L0805RED	LED0805	1
TEST		D3	L0805RED	LED0805	1
HEADER-FEMALE-2.54MM		J1	HEADER-FEMALE-20PINS-2.54MM	HEADER-FEMALE-20PINS-2.54MM	1
HEADER-FEMALE-2.54MM		J2	HEADER-FEMALE-06PINS-2.54MM	HEADER-FEMALE-06PINS-2.54MM	1
LCD		J3	HEADER-FEMALE-04PINS-2.54MM	HEADER-FEMALE-04PINS-2.54MM	1
BUTTON		J4	HEADER-FEMALE-06PINS-2.54MM	HEADER-FEMALE-06PINS-2.54MM	1
SWD		J5	HEADER-FEMALE-05PINS-2.54MM	HEADER-FEMALE-05PINS-2.54MM	1
KF306		J6	DG306-5.0-02P-12-00AH	DG306-5.0-02P-12-00AH	1
Mini58FDE	Novoton 4Kb-RAM 32Kb-Flash	MCU1	TSSOP20_0.65_4.4	Mcu-Mini58FDE	1
2N3904		Q1, Q2, Q3, Q4, Q5, Q6, Q7, Q8, Q9, Q10, Q11, Q12, Q13, Q14, Q15, Q16, Q17, Q18, Q19, Q20, Q21, Q22, Q23, Q24, Q25	SOT23-3	Transistor-2N3904 (SOT-23)	25
10k		R1, R2, R3, R4, R5, R6, R7, R8, R9, R10, R11, R12, R13, R14, R15, R16, R17, R18, R19, R20, R21, R22, R23, R24, R25, R26, R27, R28, R29, R30, R31, R32, R33, R34, R35, R36	R0805	Resistors-SMD	36
74HC595D		U1, U2, U3, U5	SO16	Ic-74HC595D	4
RealTime		U4	SOIC08_1.27_6.0	RealTime-DS1307	1
AMS1117		U6	SOT223-3	Ic-AMS1117(SOT-223)	1
32.768KHz		Y1	DT-26	Crystal 32.768KHz	1
8MHz		Y2	HC-49S	Crystal	1