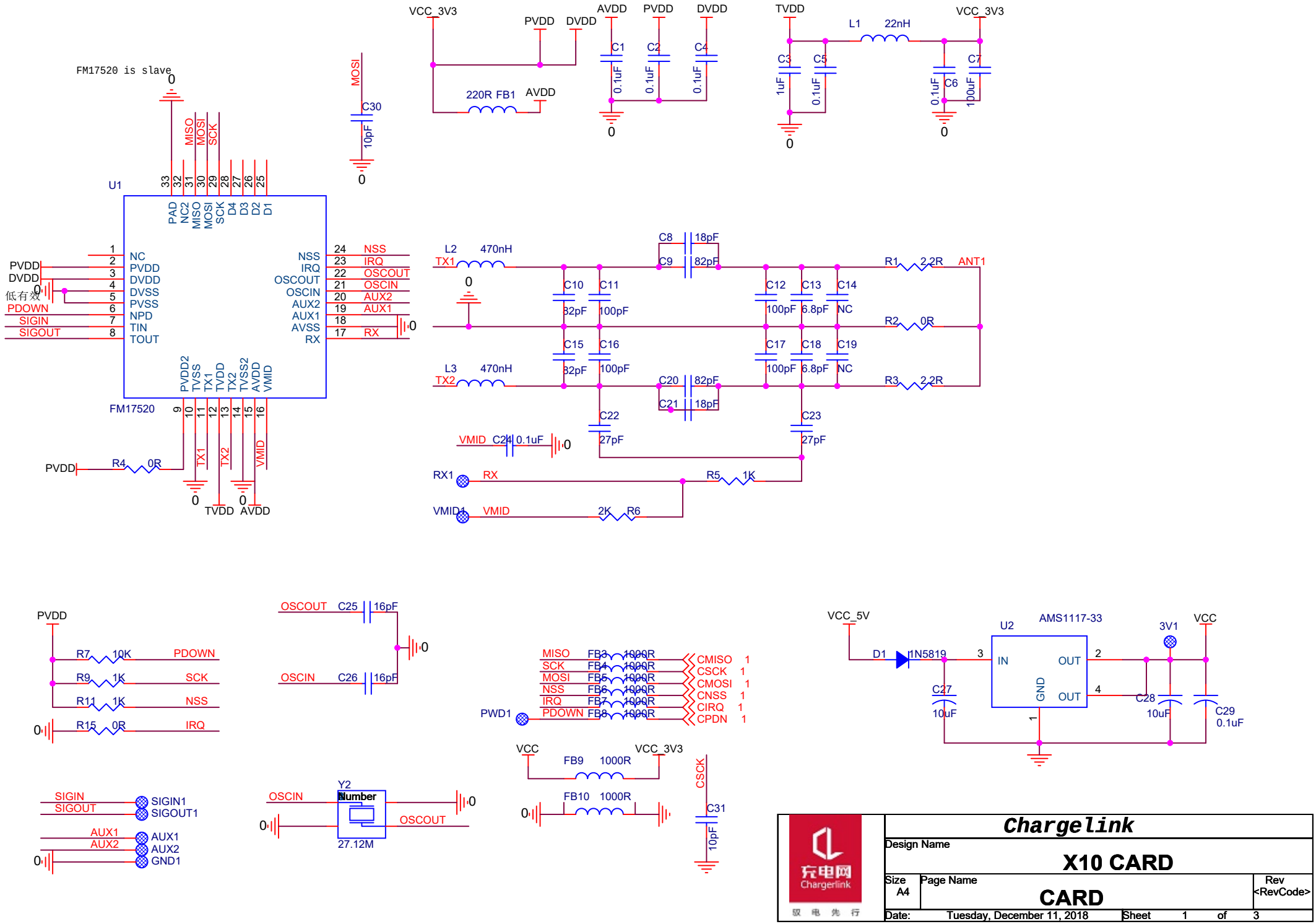
FM17520 is slave
U1
FM17520
PAD NC2 MISO MOSI SCK D4 D3 D2 D1
NC PVDD DVDD DVSS PVSS NPD TIN TOUT
NSS IRQ OSCOUT OSCIN AUX2 AUX1 AVSS RX
PVDD2 TVSS TX1 TVDD TX2 TVSS2 AVDD VMID
PVDD DVDD 低有效 PDOWN SIGIN SIGOUT
MISO MOSI SCK
C30 10pF
VCC_3V3 PVDD DVDD AVDD
220R FB1
C1 C2 C4 0.1uF
TVDD L1 22nH VCC_3V3
C3 1uF C5 0.1uF C6 0.1uF C7 100uF
L2 470nH TX1
L3 470nH TX2
C8 18pF C9 82pF
C10 32pF C11 100pF
C12 100pF C13 6.8pF C14 NC
C15 32pF C16 100pF
C17 100pF C18 6.8pF C19 NC
C20 82pF C21 18pF
C22 27pF C23 27pF
R1 2.2R ANT1
R2 0R
R3 2.2R
VMID C24 0.1uF
RX1 RX R5 1K
VMID1 VMID 2K R6
R4 0R
TVDD AVDD
OSCOUT C25 16pF
OSCIN C26 16pF
PVDD R7 10K PDOWN
R9 1K SCK
R11 1K NSS
R15 0R IRQ
MISO FB3 1000R CMISO 1
SCK FB4 1000R CSCK 1
MOSI FB5 1000R CMOSI 1
NSS FB6 1000R CNSS 1
IRQ FB7 1000R CIRQ 1
PDOWN FB8 1000R CPDN 1
PWD1
VCC_5V D1 1N5819 U2 AMS1117-33 IN OUT GND OUT 3V1 VCC
C27 10uF C28 10uF C29 0.1uF
VCC FB9 1000R VCC_3V3
FB10 1000R CSCK C31 10pF
SIGIN SIGOUT SIGIN1 SIGOUT1
AUX1 AUX2 AUX1 AUX2 GND1
OSCIN Y2 Number OSCOUT 27.12M
Chargelink
Design Name
X10 CARD
Size A4
Page Name
CARD
Rev <RevCode>
Date: Tuesday, December 11, 2018
Sheet 1 of 3

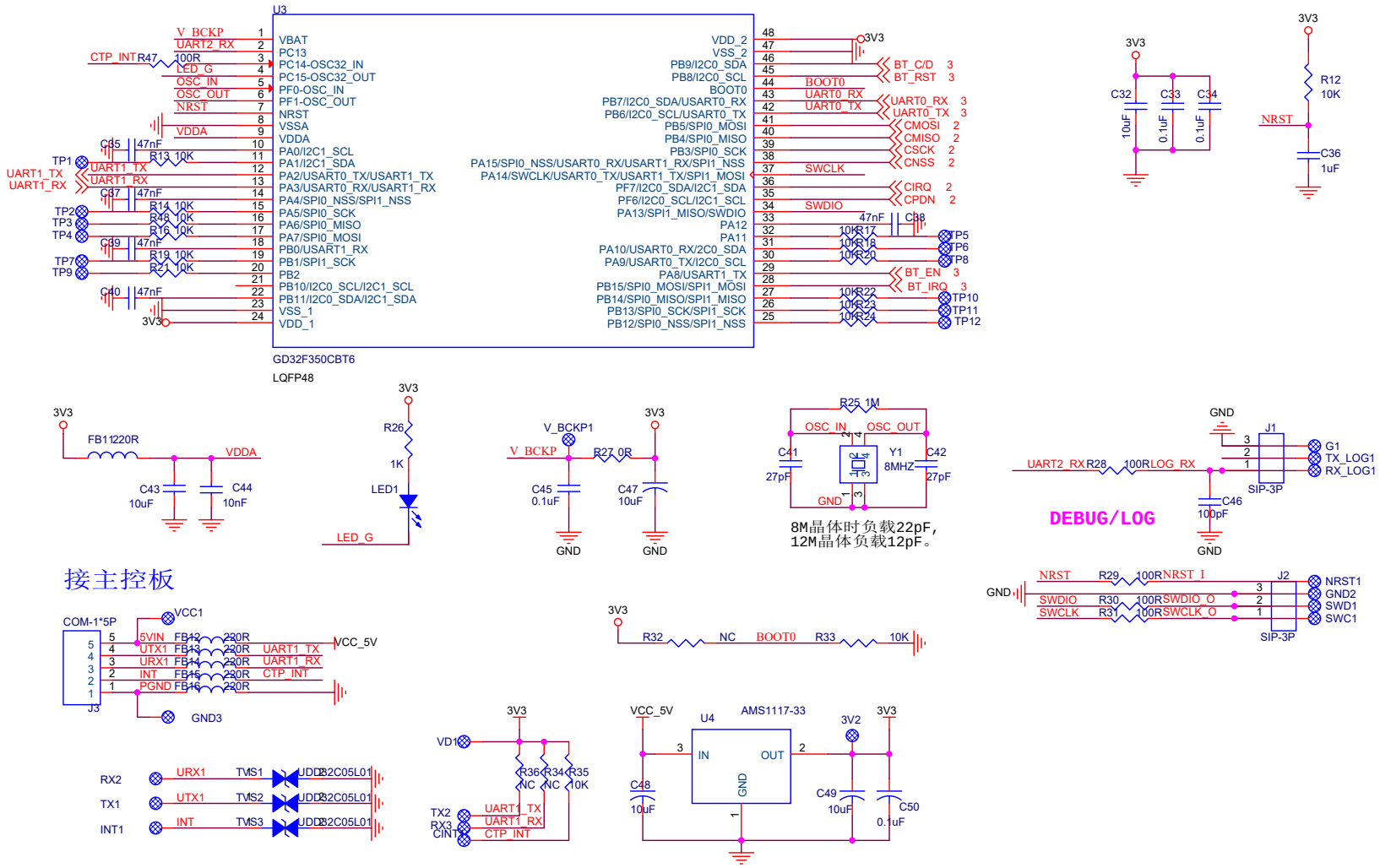

Chargelink		
Design Name	X10 CARD	
Size B	Page Name MCU	Rev <RevCode>
Date: Tuesday, December 11, 2018	Sheet 2 of 3	

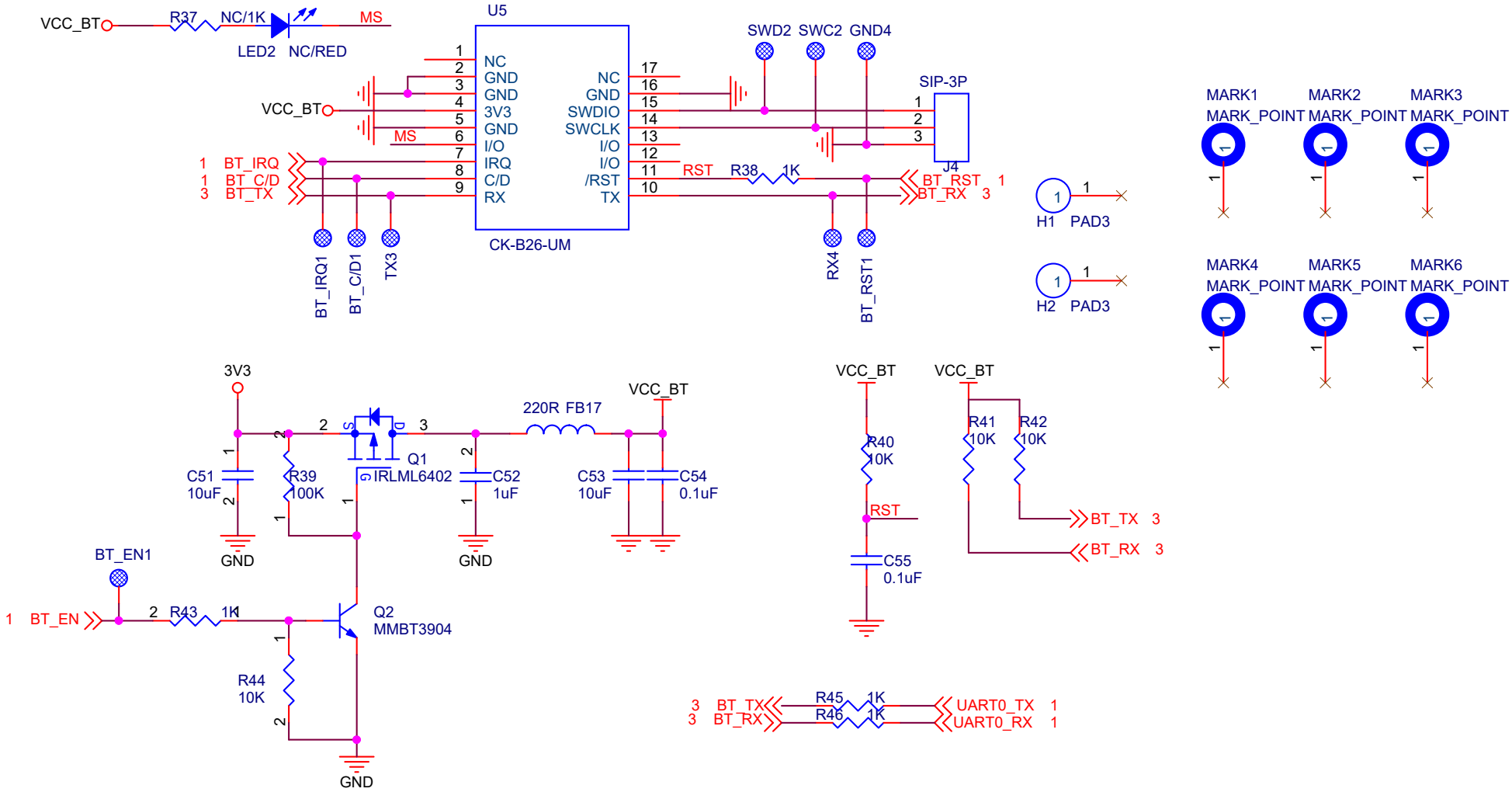

充电网 Chargerlink 取电先行	Chargelink		
	Design Name: X10 CARD		
Size: A	Page Name: BT		Rev: <RevCode>
Date: Tuesday, December 11, 2018	Sheet 3 of 3		