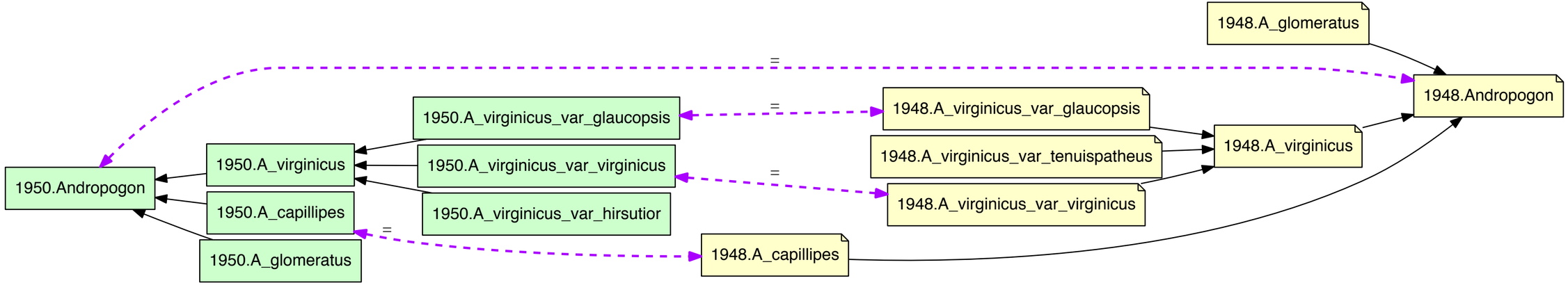Nodes	
1948	7
1950	7
Edges	
is_a (1948)	6
is_a (1950)	6
articulations	4