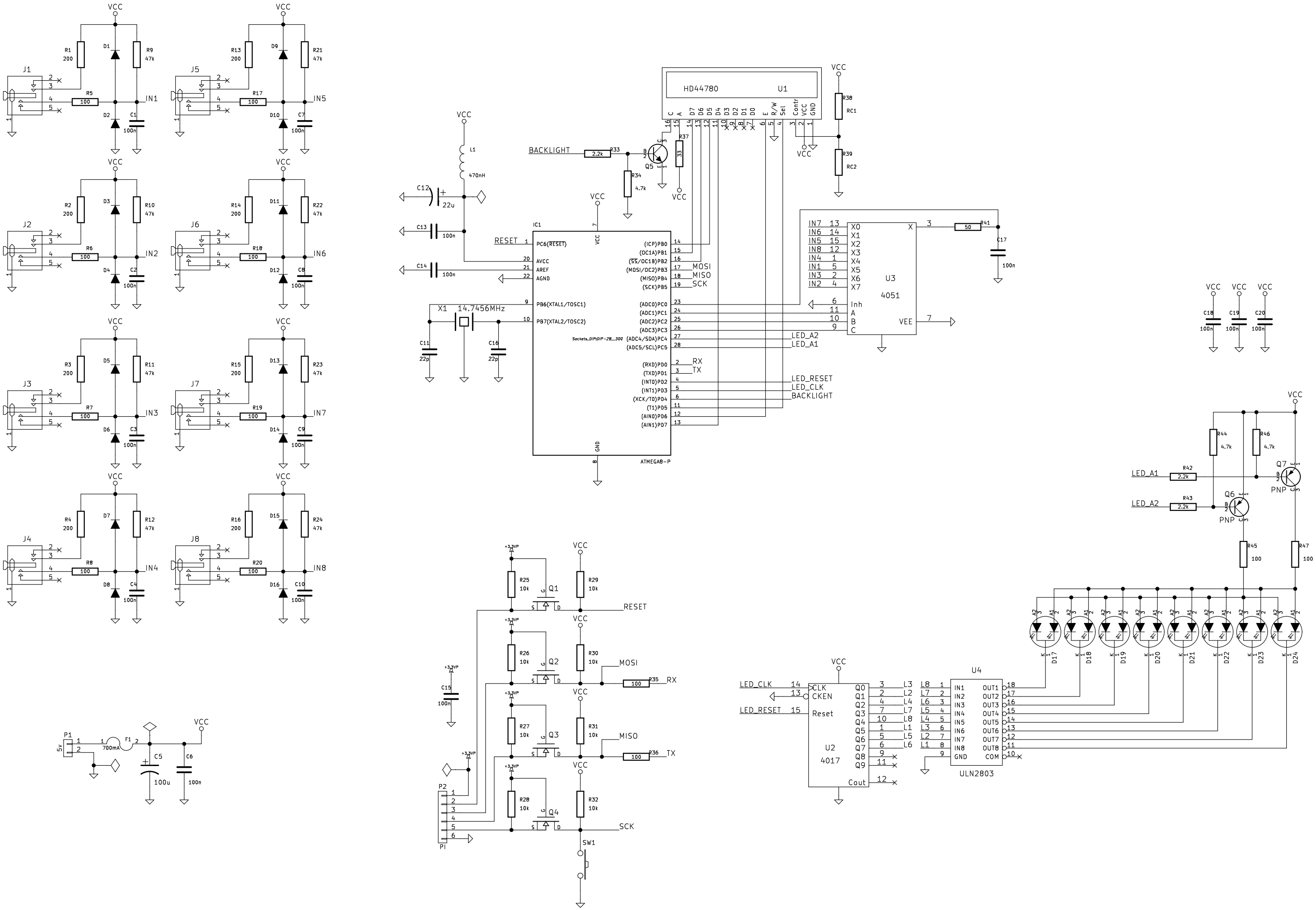
VCC
J1
J2
J3
J4
J5
J6
J7
J8
R1 200
R2 200
R3 200
R4 200
R5 100
R6 100
R7 100
R8 100
R9 47k
R10 47k
R11 47k
R12 47k
R13 200
R14 200
R15 200
R16 200
R17 100
R18 100
R19 100
R20 100
R21 47k
R22 47k
R23 47k
R24 47k
D1
D2
D3
D4
D5
D6
D7
D8
D9
D10
D11
D12
D13
D14
D15
D16
C1 100n
C2 100n
C3 100n
C4 100n
C7 100n
C8 100n
C9 100n
C10 100n
IN1
IN2
IN3
IN4
IN5
IN6
IN7
IN8
HD44780 U1
R38 RC1
R39 RC2
L1 470nH
C12 22u
C13 100n
C14 100n
BACKLIGHT
R33 2.2k
R34 4.7k
R37 33
Q5
IC1
RESET
PC6(RESET)
AVCC
AREF
AGND
PB6(XTAL1/TOSC1)
PB7(XTAL2/TOSC2)
X1 14.7456MHz
C11 22p
C16 22p
(ICP)PB0
(OC1A)PB1
(SS/OC1B)PB2
(MOSI/OC2)PB3
(MISO)PB4
(SCK)PB5
(ADC0)PC0
(ADC1)PC1
(ADC2)PC2
(ADC3)PC3
(ADC4/SDA)PC4
(ADC5/SCL)PC5
(RXD)PD0
(TXD)PD1
(INT0)PD2
(INT1)PD3
(XCK/T0)PD4
(T1)PD5
(AIN0)PD6
(AIN1)PD7
MOSI
MISO
SCK
RX
TX
LED_A2
LED_A1
LED_RESET
LED_CLK
BACKLIGHT
ATMEGA8-P
U3 4051
X0
X1
X2
X3
X4
X5
X6
X7
Inh
A
B
C
VEE
R41 50
C17 100n
C18 100n
C19 100n
C20 100n
R44 4.7k
R46 4.7k
R42 2.2k
R43 2.2k
Q7 PNP
Q6 PNP
R45 100
R47 100
D17
D18
D19
D20
D21
D22
D23
D24
Q1
Q2
Q3
Q4
R25 10k
R26 10k
R27 10k
R28 10k
R29 10k
R30 10k
R31 10k
R32 10k
R35 100
R36 100
C15 100n
P2
PI
SW1
P1 5v
F1 700mA
C5 100u
C6 100n
U2 4017
CLK
CKEN
Reset
Cout
U4 ULN2803
IN1
IN2
IN3
IN4
IN5
IN6
IN7
IN8
GND
OUT1
OUT2
OUT3
OUT4
OUT5
OUT6
OUT7
OUT8
COM