MCU

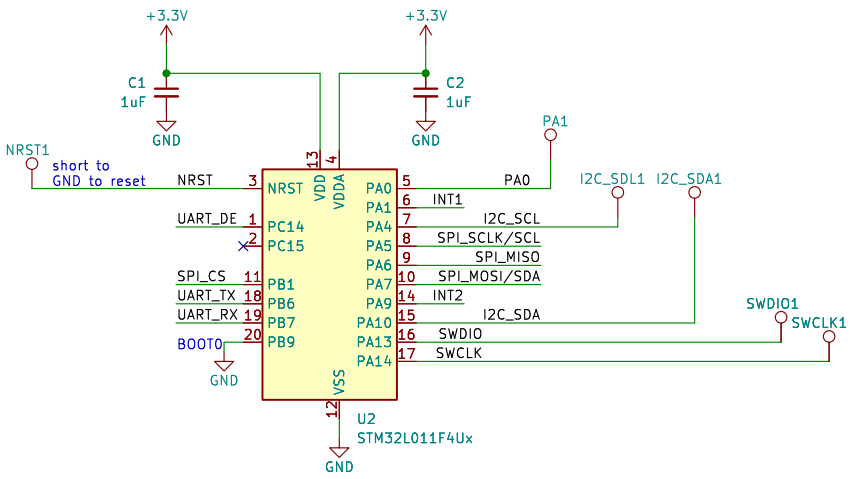

RS485

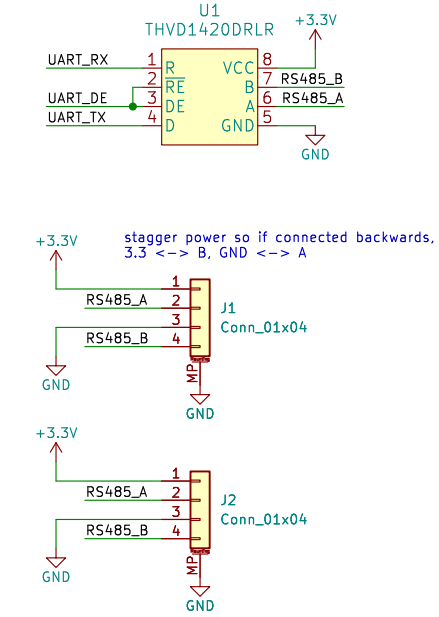

IMU

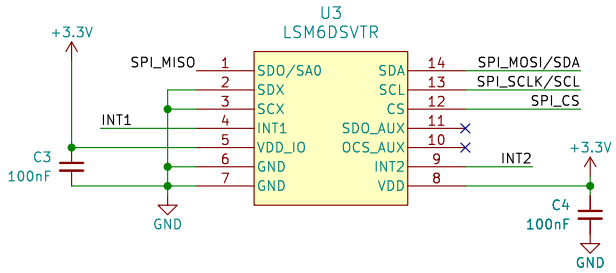

I2C alternative

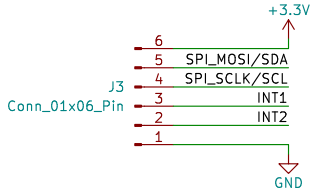

Christopher Xu

Sheet: /
File: 012imu.kicad_sch

Title: Ø12imu

Size: A4	Date: 2024-03-10	**Rev: 1**
KiCad E.D.A. kicad 7.0.7		Id: 1/1