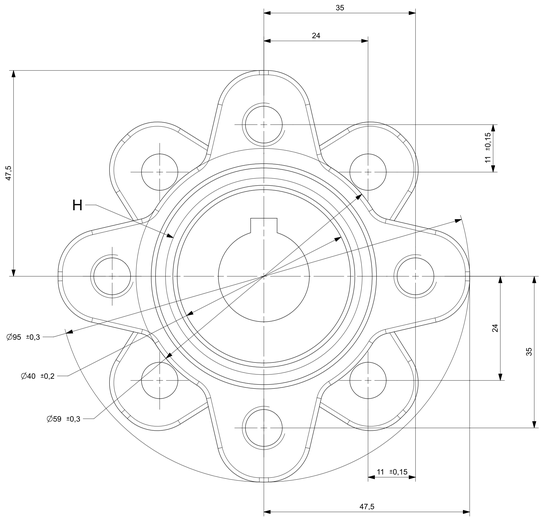

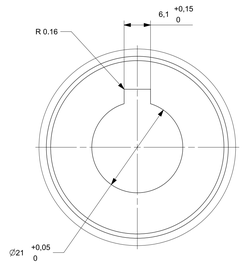

DETAIL H
SCALE 2:1

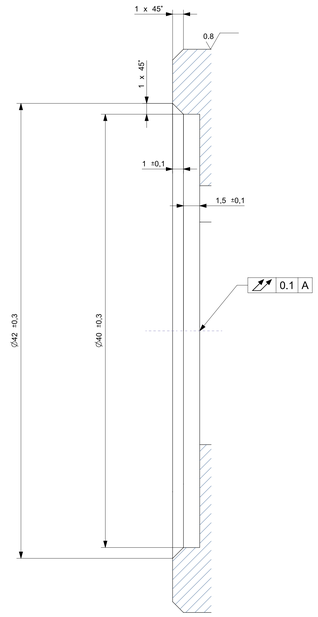

DETAIL D
SCALE 5:1

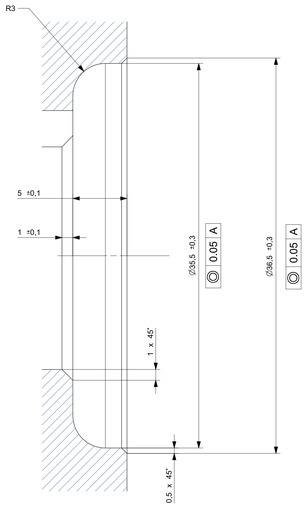

DETAIL E
SCALE 5:1

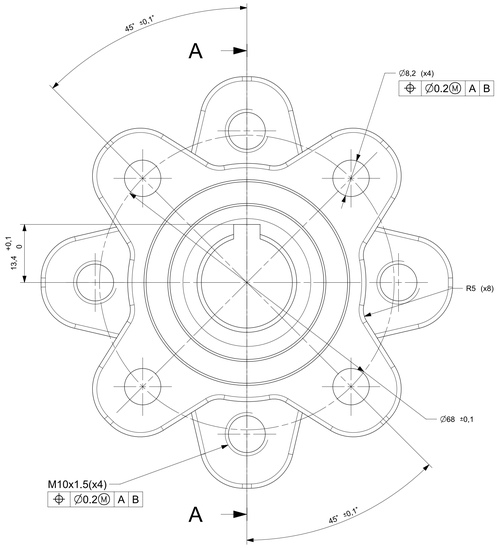

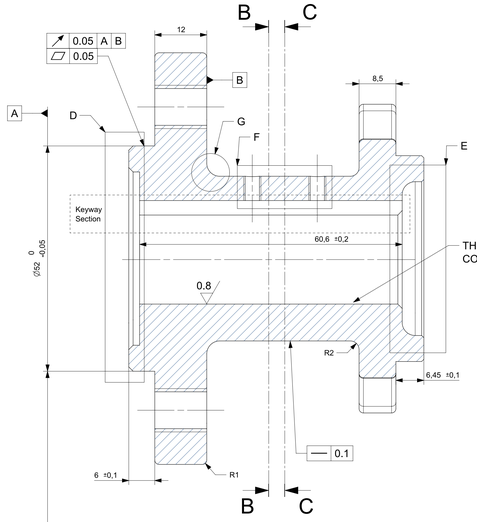

THIS AREA SHOULD BE PROTECTED FROM COATING AND LUBRICATED AGAINST CORROSION.

SECTION A-A

THIS AREA SHOULD BE PROTECTED FROM COATING AND LUBRICATED AGAINST CORROSION.

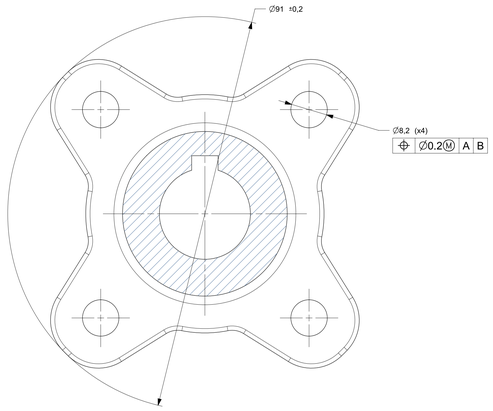

SECTION B-B

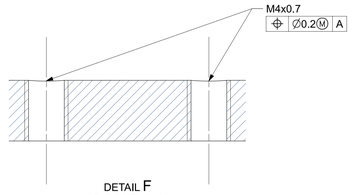

DETAIL F
SCALE 5:1

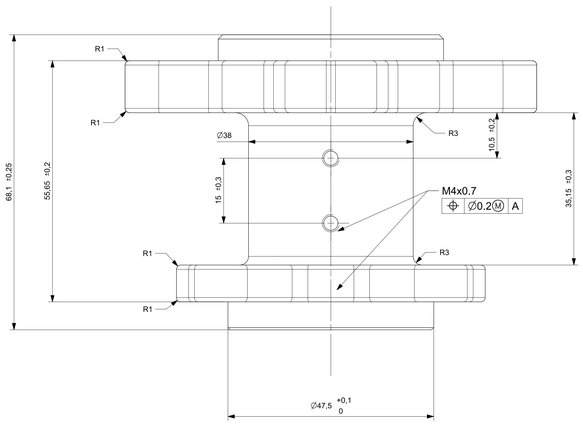

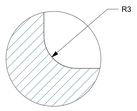

DETAIL G
SCALE 5:1

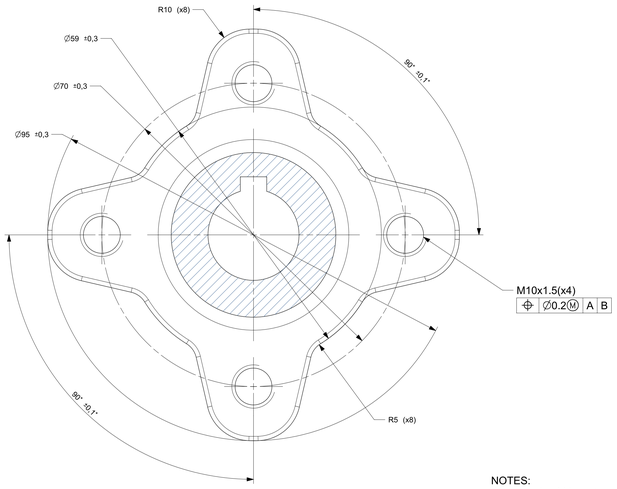

SECTION C-C

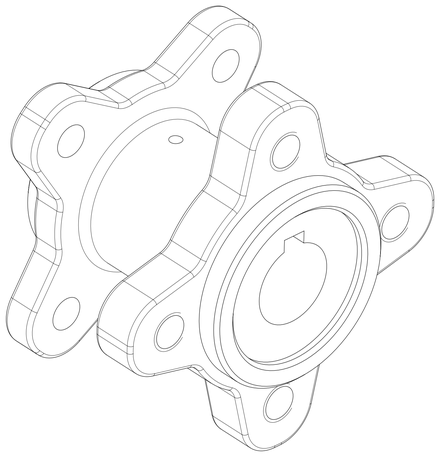

NOTES:
-Keyway should be cut according to the DIN 6885.
-Complete Heat Treatment (50-56 HRc) will be applied to the part.
-Debur and break sharp edges.

REVISED 29.04.2023	MATERIAL: MALZEME: C1040	TRACEABILITY: IZLENEBILIRLIK: -		REGULATION: REGÜLASYONLAR: -	
ECO NO:	HARDNESS: SERTLİK: -	COATING: KAPLAMA: BLACK CATHERPHORESIS		NORMES: ŞARTNAMELER: -	
Tolerances have been changed.	PART NAME: PARÇA ADI: WHEEL HUB (DRIVEN)			WEIGHT AĞIRLIK 0,90 kg	DRAWN: DÜZEN: Mert İNCİ CHECKED: KONTROL: Yasin BORAN APP. ONAY: Baki Orçun ORGÜL
	DWG NO: RESİM NO: FQK.213021.AA	SSR: -	PAGE SAYFA 1/1	SCALE ÖLÇEK 1:1	MODEL: MODEL:
DRAWN: DÜZEN: Mert İNCİ CHECKED: KONTROL: Yasin BORAN APP. ONAY: Baki Orçun ORGÜL	FH FERNLEY		FORMAT EBAT A0	UNSPECIFIED TOLERANCES GENEL TOLERANS ISO 2768-mK	VERSION: VERSİYON: E
	Fernley LTD Elizabeth House 13-19 London Road Newbury Berkshire RG14 1JL United Kingdom				