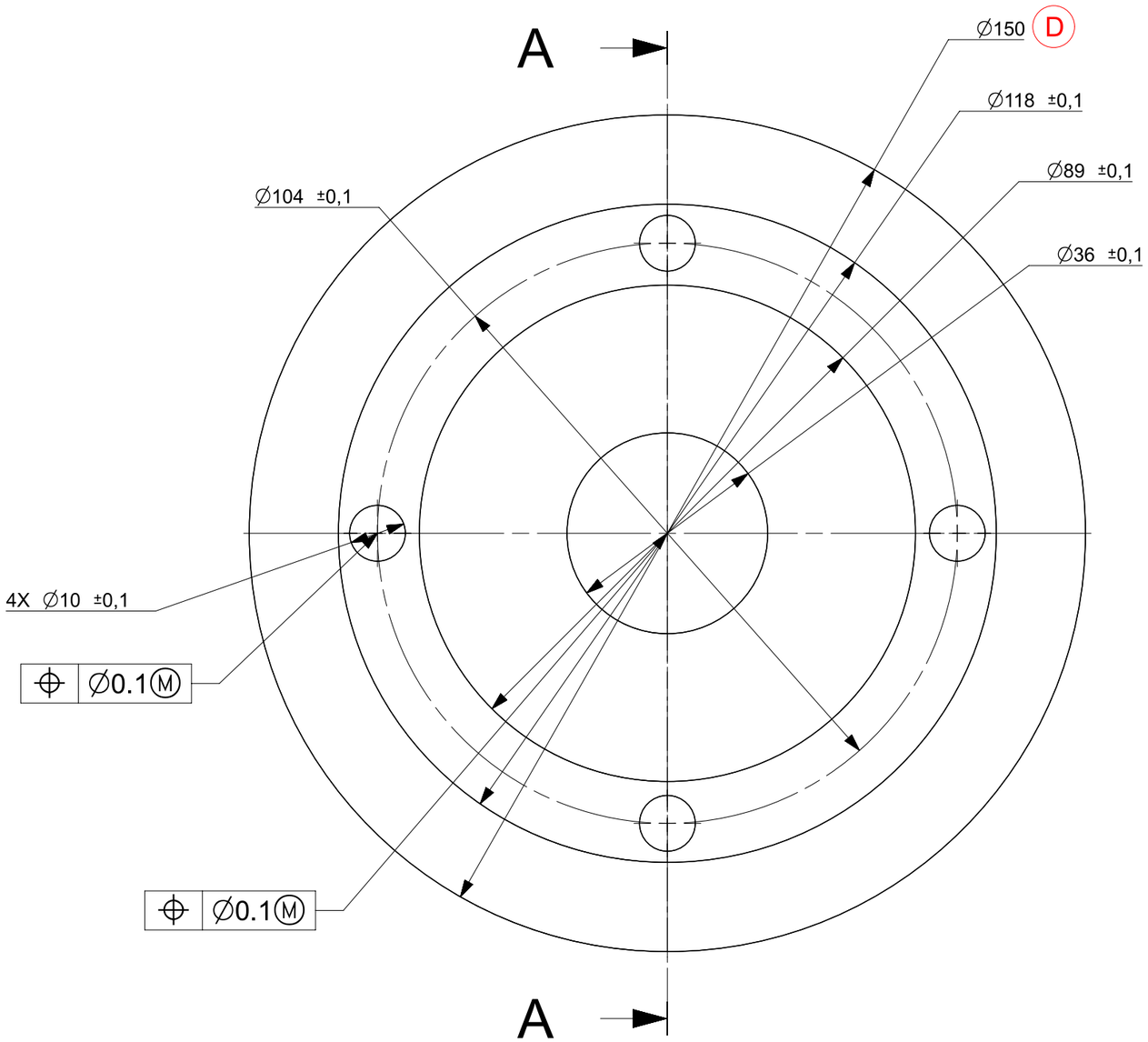

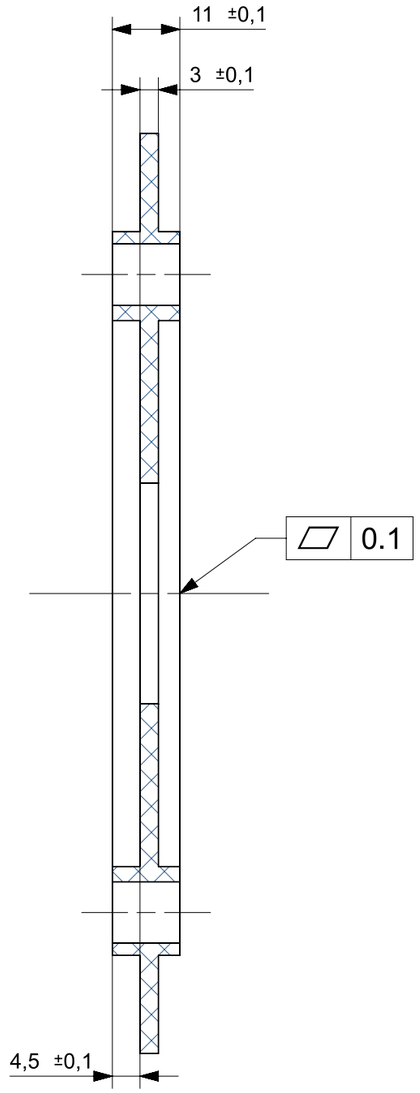

SECTION A-A

D	03.05.2023	C	28.02.2023	B	18.11.2022	A	02.06.2022
ECO NO: 006941		ECO NO: 006900		ECO NO: 006738		ECO NO: 006715	
MATERIAL UPDATED AND COATING ADDED		MATERIAL UPDATE		GENERAL TOLERANCES ADDED.		FIRST RELEASE	
ÇİZEN: DRAWN:	CAGLAR OZTURK	DRAWN: ÇİZEN:	KEMAL DURAK	DRAWN: ÇİZEN:	KEMAL DURAK	DRAWN: ÇİZEN:	KEMAL DURAK
KONTROL: CHECKED:	MEHMET SOGUT	CHECKED: KONTROL:	FURKAN KELASOVALI	CHECKED: KONTROL:	FURKAN KELASOVALI	CHECKED: KONTROL:	CAN OZBERKMEN
ONAY: APP.:	ORAL VATAN	APP: ONAY:	ORAL VATAN	APP.: ONAY:	ORAL VATAN	APP.: ONAY:	FURKAN KELASOVALI

MATERIAL: MALZEME:	6082 Al-T6 D	TRACEABILITY: İZLENEBİLİRLİK:	-	REGULATION: REG. İŞARET:	-
HARDNESS: SERTLİK:	-	COATING: KAPLAMA:	Hard Anodising	NORMES: ŞARTNAMELER:	-
PART NAME: PARÇA ADI:	CRANK SPROCKET GUARD			WEIGHT AĞIRLIK	0,18 kg
				DRAWN: ÇİZEN:	KEMAL DURAK
				CHECKED: KONTROL:	CAN OZBERKMEN
				APP.: ONAY:	FURKAN KELASOVALI
DWG NO: RESİM NO:	FQK.132007.AA	SSR:	-	PAGE SAYFA	1/1
SCALE ÖLÇEK	1:1	MODEL: MODEL:	EQUAD		
FORMAT EBAT	A3	UNSPECIFIED TOLERANCES GENEL TOLERANS	LINEAR: +/- 0.25 mm ANGULAR: +/- 1°	VERSION: VERSİYON:	

Fernhay LTD Elizabeth House 13-19 London Road Newbury Berkshire RG14 1JL United Kingdom