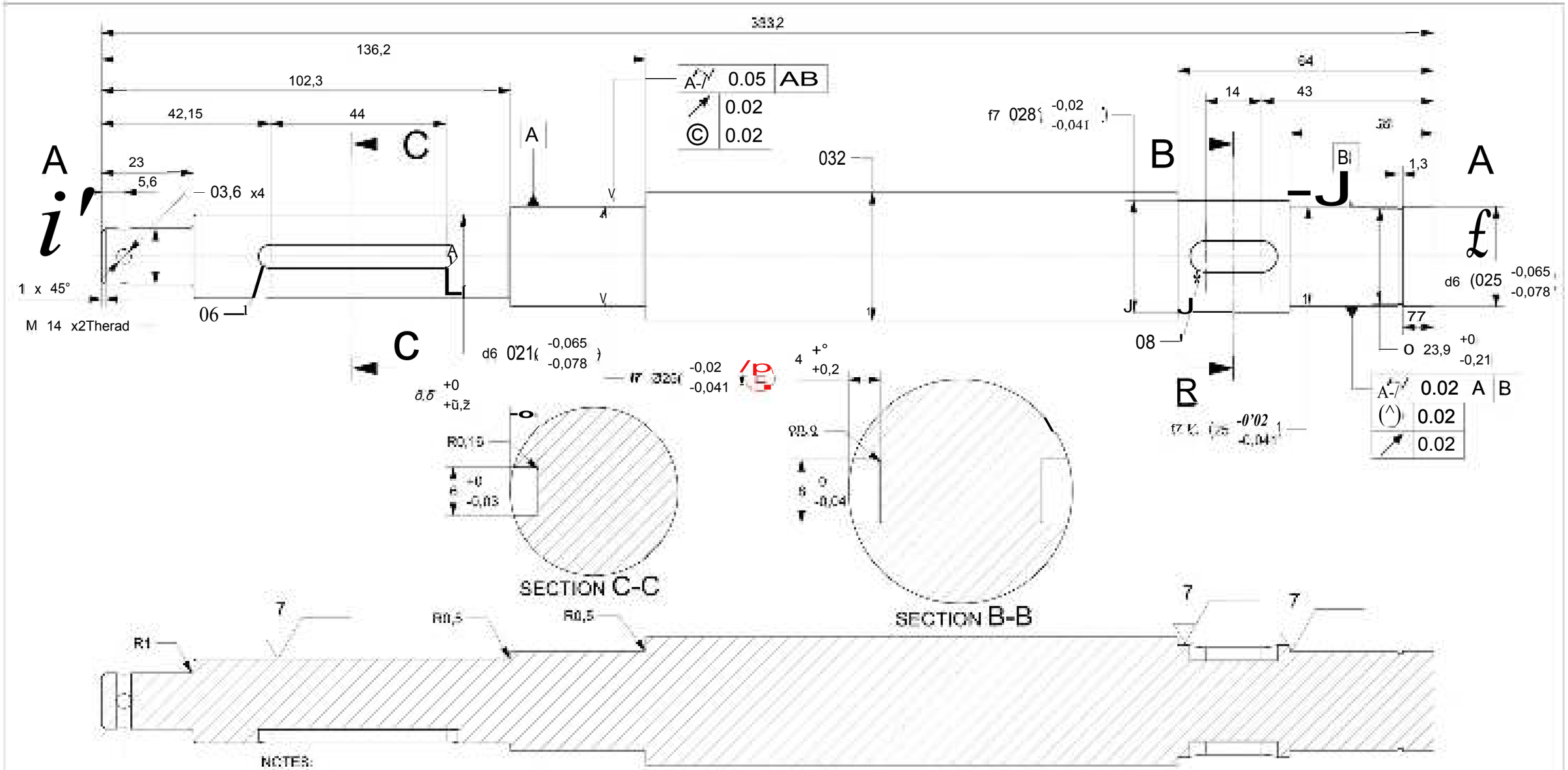

NOTES:
- Keyways should be cut according to the DIN 6885.
- Debur and break sharp edges.
- ~~Complete heat treatment 48-52HRc~~

ISIL İŞLEM İPTAL EDİL. 05.12.2023

05.12.2023
MALZEME SAE 4340- REVİZYON F

FMEA - PPAP - İLK NUMUNE DEĞİŞTİ

E	22.06.2023	D	25.05.2023	C	05.04.2023	B	21.11.2022	A	24.05.2022
ECONO: 006976		ECONO: 006963		ECONO: 006938		ECONO: 006738		ECONO: 006715	
TOLERANCE UPDATED FOR 25 DIAMETER		TOLERANCE REVISION		CHAMFER HAS CHANGED TO RADIUS AND THE NOTES UPDATED		WEIGHT AND ECO NUMBERADDED		FIRST RELEASE	
ÇİZEN: DRAWN:	CAĞLAR OZTURK	ÇİZEN: DRAWN:	CAĞLAR OZTURK	ÇİZEN: DRAWN:	CAĞLAR OZTURK	DRAWN: ÇİZEN:	KEMAL DURAK	DRAWN: ÇİZEN:	KEMAL DURAK
KONTROL: CHECKED:	MEHMET SOGUT	KONTROL: CHECKED:	MEHMET SOGUT	KONTROL: CHECKED:	BATUHAN BODUROGLU	CHECKED: KONTROL:	FURKAN KELASOVALI	CHECKED: KONTROL:	CAN OZBERKMEN
ONAY: APP.:	ORAL VATAN	ONAY: APR:	ORAL VATAN	ONAY: APR:	ORAL VATAN	APR: ONAY:	ORAL VATAN	APR: ONAY:	FURKAN KELASOVALI

MATERIAL: MALZEME:	~~SAE4140~~	TRACEABILITY: İZLENEBİLİRLİK:	-
HARDNESS: SERTLİK:		COATING: KAPLAMA:	- DIN10683 Alkaline Geomet Black
REGULATION: REG. İŞARET:	-	NORMES: ŞARTNAMELER:	
PART NAME: PARÇAADI:	REAR DRIVESHAFT	WEIGHT AĞIRLIK	1.464kg
ÇİZENİ	CAĞLAR OZTURK	KONTROL:	MEHMET SOGUT
0^y.	ORAL VATAN		
DWG NO: RESİM NO:	FQK.144004.AA	SSR:	-
PAGE SAYFA	1/4	SCALE ÖLÇEK	1:1
MODEL: MODEL:	FOUAD		
FERN HAY		FORMAT EBAT	A3
UNSPECIFIED TOLERANCES GENEL TOLERANS	LINEAR: +/- 0.25 mm ANGULAR: +/- 1°	VERSION: VERSİYON:	

Fernhay LTD Elizabeth House 13-19 London Road Newbury Berkshire RG14 1JL United Kingdom