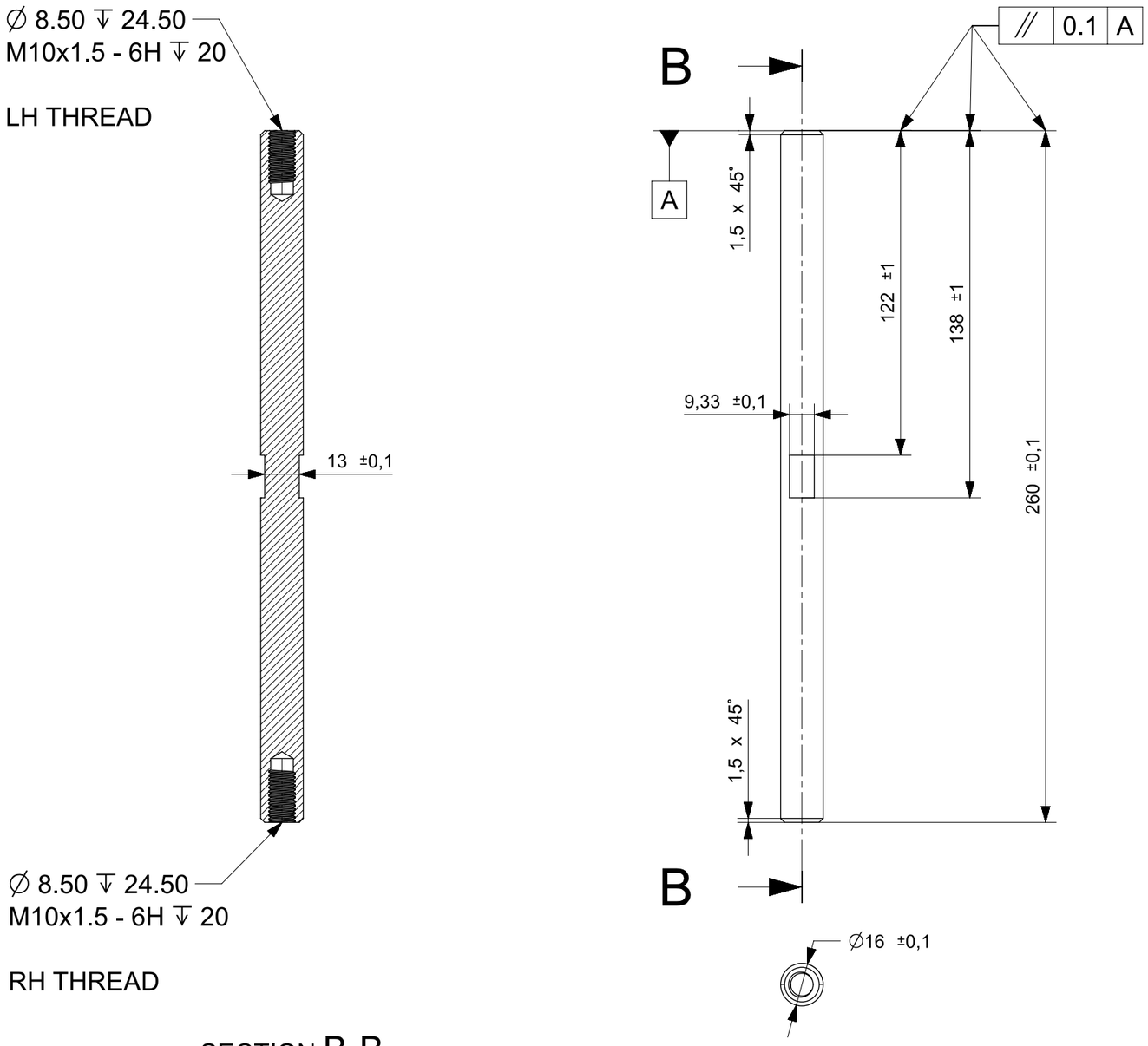

SECTION B-B

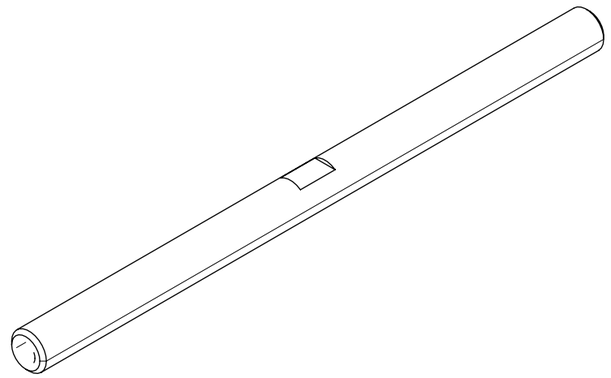

REVISED	10.04.2023	MATERIAL: MALZEME: C1040	TRACEABILITY: İZLENEBİLİRLİK: -	REGULATION: REG. İŞARET: -	
ECO NO:		HARDNESS: SERTLİK: -	COATING: KAPLAMA: Black Cataphoresis	NORMES: ŞARTNAMELER: -	
CHANGE DESCRIPTION		PART NAME: PARÇA ADI: STEERING TURNBUCKLE LINK		WEIGHT AĞIRLIK 0,29 kg	DRAWN: ÇİZEN: Mert İNCİ CHECKED: KONTROL: Yasin BORAN APP.: ONAY: Baki Orçun ORGÜL
		DWG NO: RESİM NO: FQK.252000.AA	SSR: -	PAGE SAYFA 1/1	SCALE ÖLÇEK 1:2 / MODEL: MODEL:
DRAWN: ÇİZEN: Mert İNCİ CHECKED: KONTROL: Yasin BORAN APP.: ONAY: Baki Orçun ORGÜL		FH FERNHAY		FORMAT EBAT A3	UNSPECIFIED TOLERANCES GENEL TOLERANS - / VERSION: VERSİYON: C
		Fernhay LTD Elizabeth House 13-19 London Road Newbury Berkshire RG14 1JL United Kingdom			