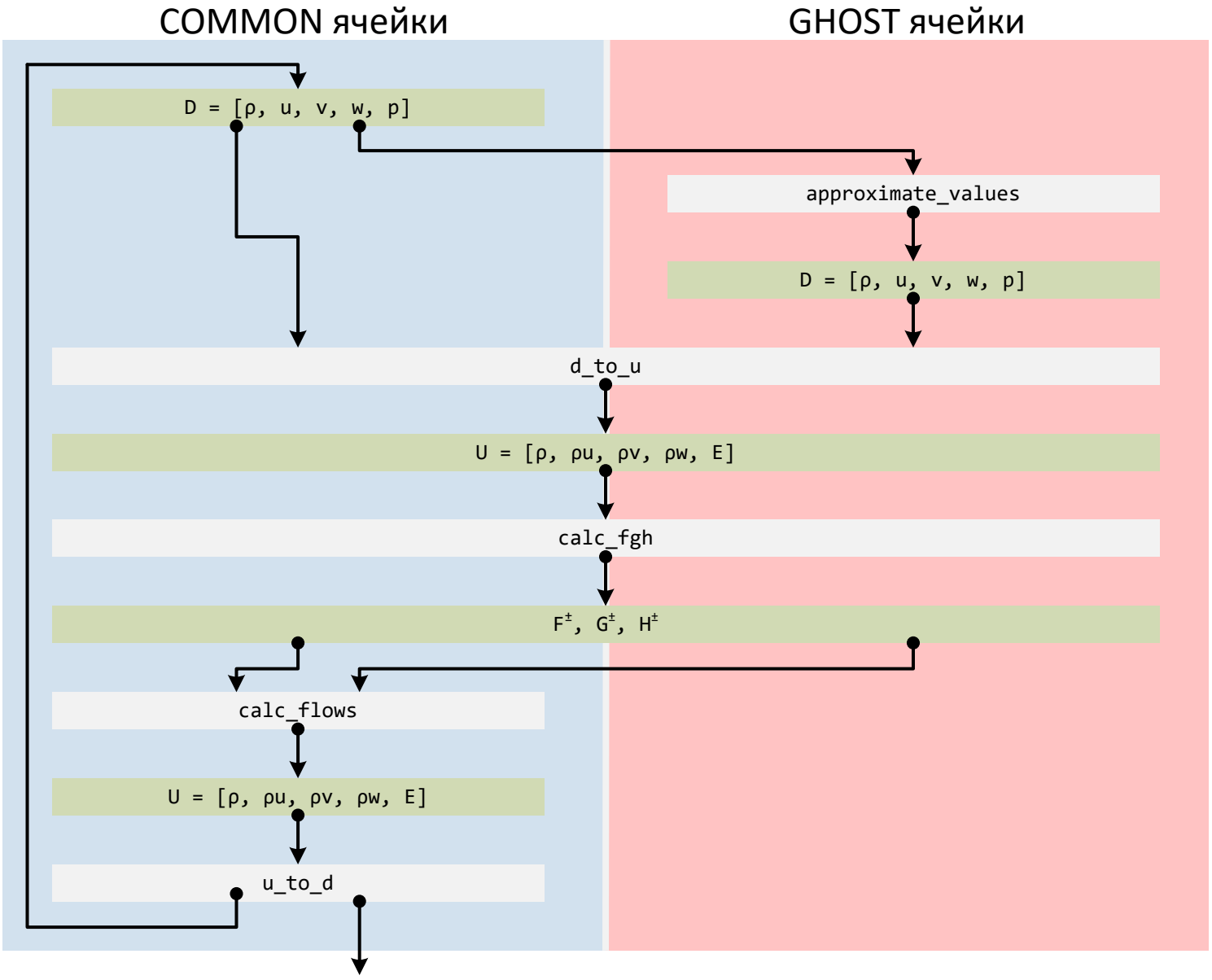
COMMON ячейки
GHOST ячейки
D = [ρ, u, v, w, p]
approximate_values
D = [ρ, u, v, w, p]
d_to_u
U = [ρ, ρu, ρv, ρw, E]
calc_fgh
F±, G±, H±
calc_flows
U = [ρ, ρu, ρv, ρw, E]
u_to_d