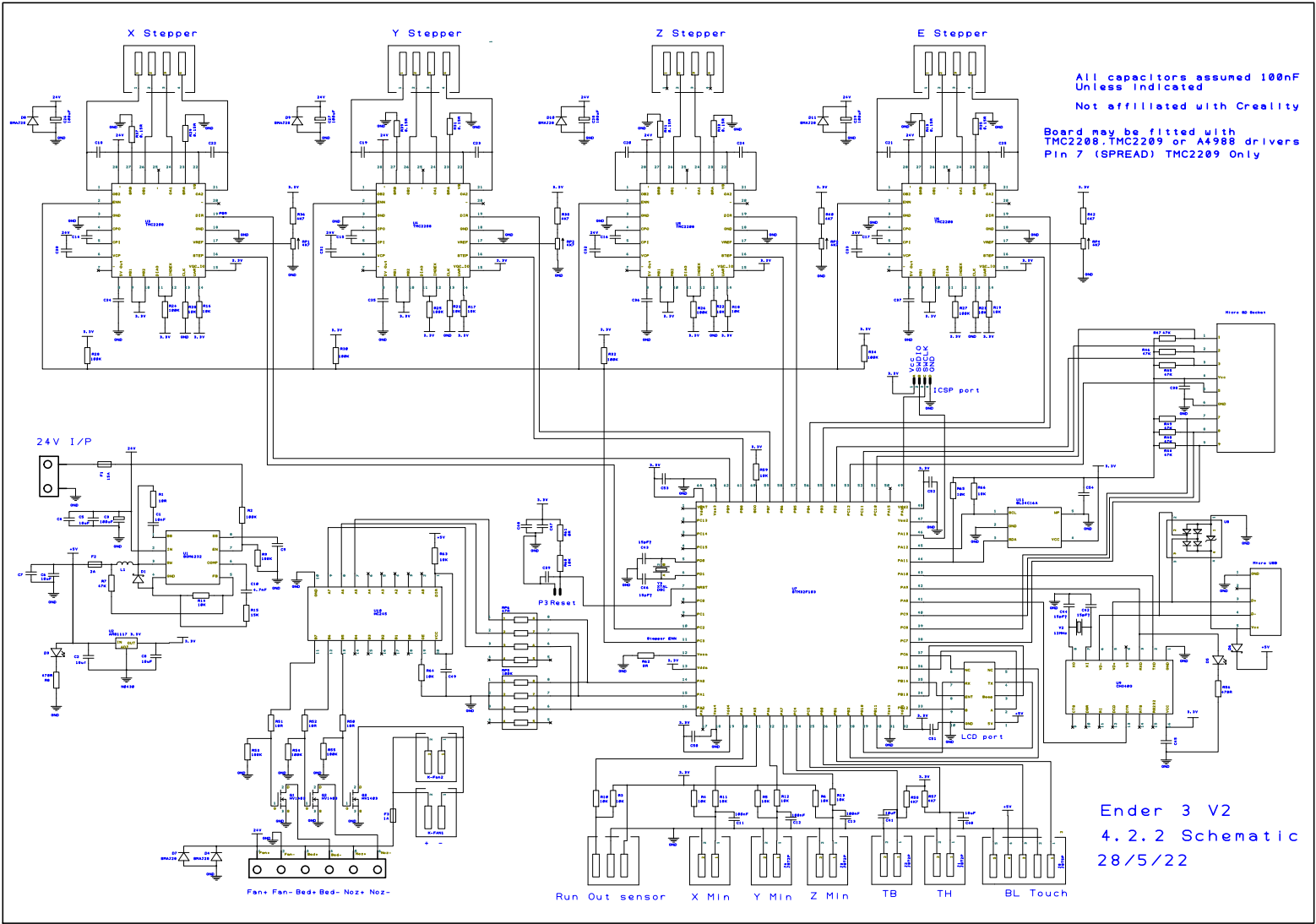
X Stepper
Y Stepper
Z Stepper
E Stepper
All capacitors assumed 100nF
Unless indicated
Not affiliated with Creality
Board may be fitted with
TMC2208,TMC2209 or A4988 drivers
Pin 7 (SPREAD) TMC2209 Only
Micro SD Socket
ICSP port
24V I/P
P3Reset
LCD port
Micro USB
Fan+ Fan- Bed+ Bed- Noz+ Noz-
Run Out sensor
X Min
Y Min
Z Min
TB
TH
BL Touch
Ender 3 V2
4.2.2 Schematic
28/5/22