These designs are based on the architectural drawings provided by client. Details listed below.

1:45	Drawing1	COMPANY	DATE DRAWN 01-03-2021	the Company.

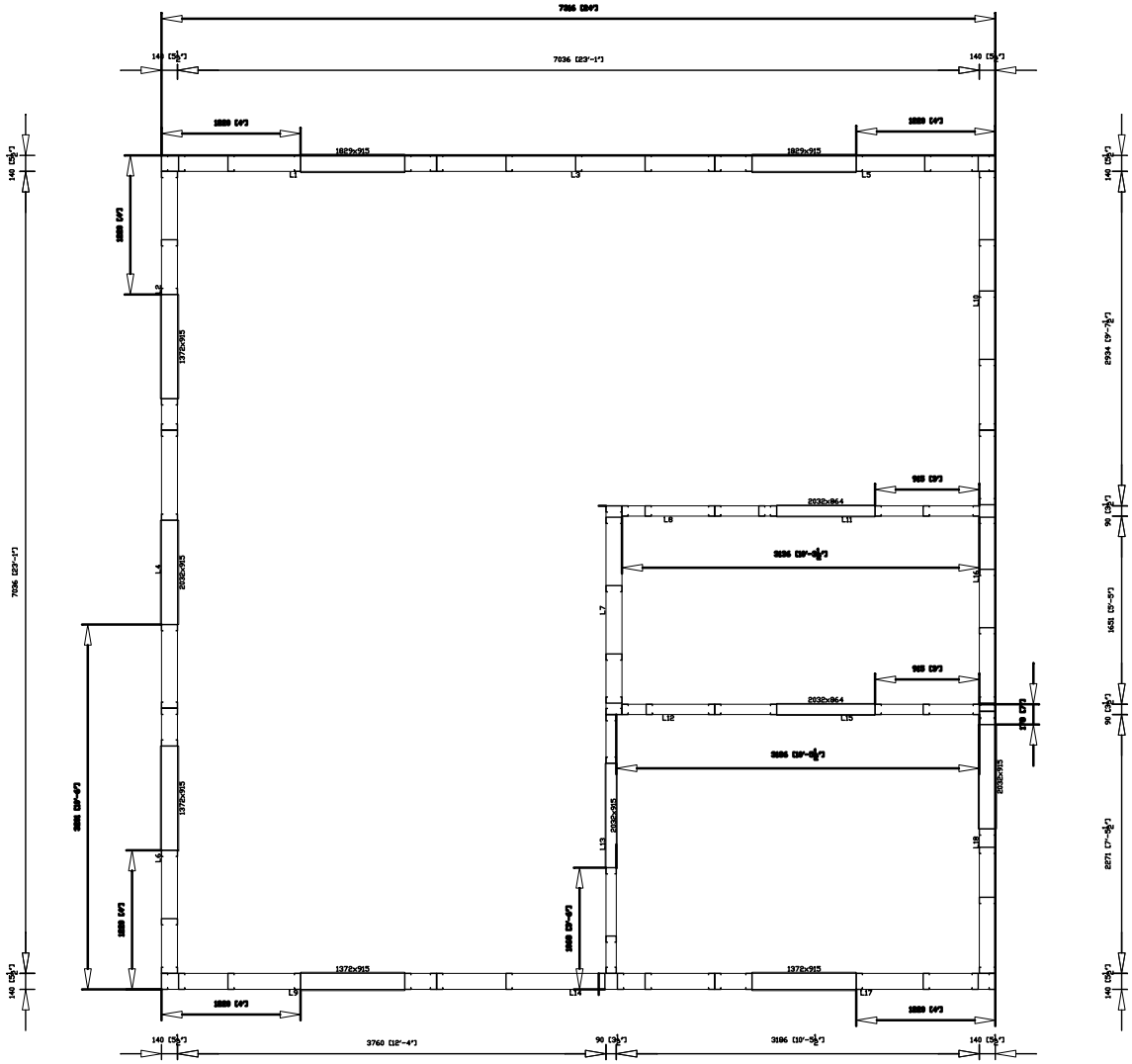

REV	BY	DETAILS		DATE

These designs are based on the architectural drawings provided by client. Details listed below.

VIEW NAME	DRAWN	ADDRESS	APPROVED
1 of 8	Alex Bryan		
SCALE	DWG FILE	COMPANY	JOB REFERENCE
1:45	Drawing1	DATE DRAWN 01-03-2021	

b&m Metals

AS MASTER COPYRIGHT: This design and drawing is the property of B&M Metals and must not used, reproduced or copied wholly or in part without written permission from the Company.

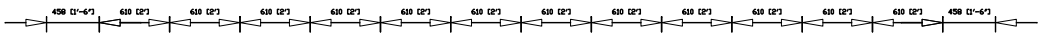

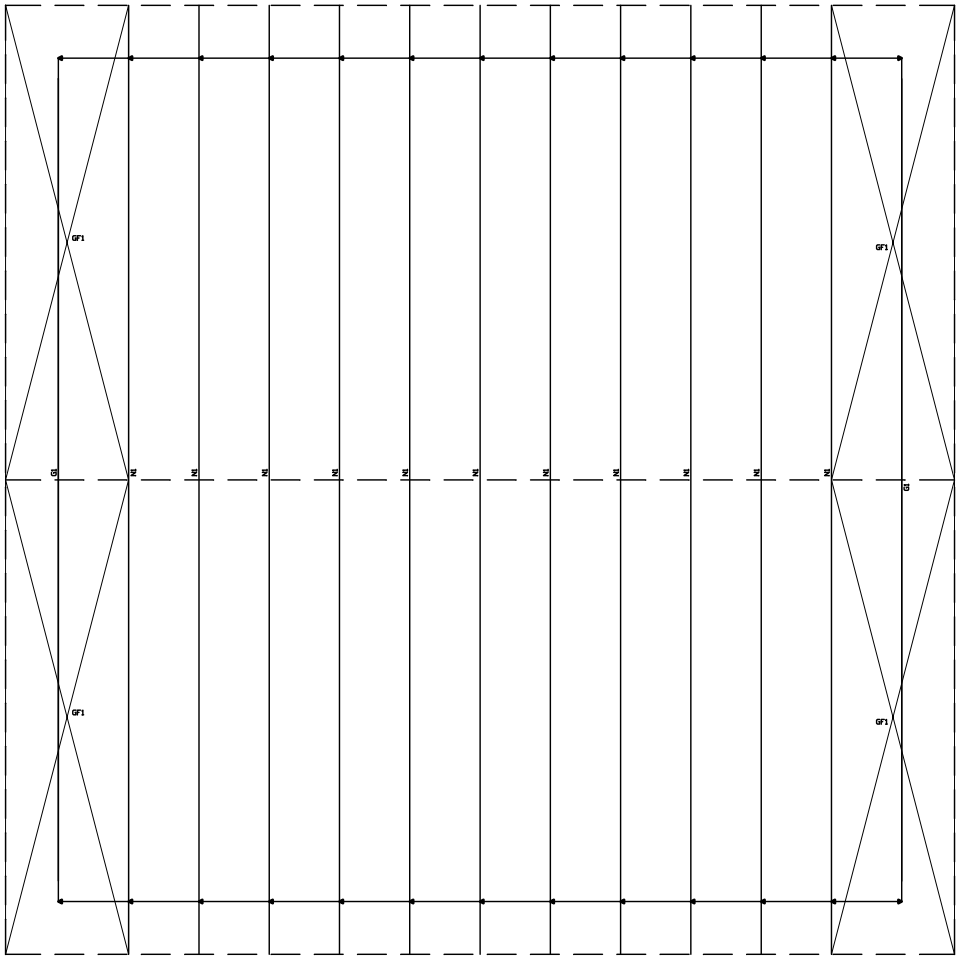

REV	BY	DETAILS		DATE

These designs are based on the architectural drawings provided by client. Details listed below.

VIEW NAME	DRAWN	ADDRESS	APPROVED
2 of 8	Alex Bryan		
SCALE	DWG FILE		JOB REFERENCE
1:45	Drawing1	COMPANY	DATE DRAWN 01-03-2021

AS MASTER COPYRIGHT: This design and drawing is the property of BAM Metals and must not used, reproduced or copied wholly or in part without written permission from the Company.

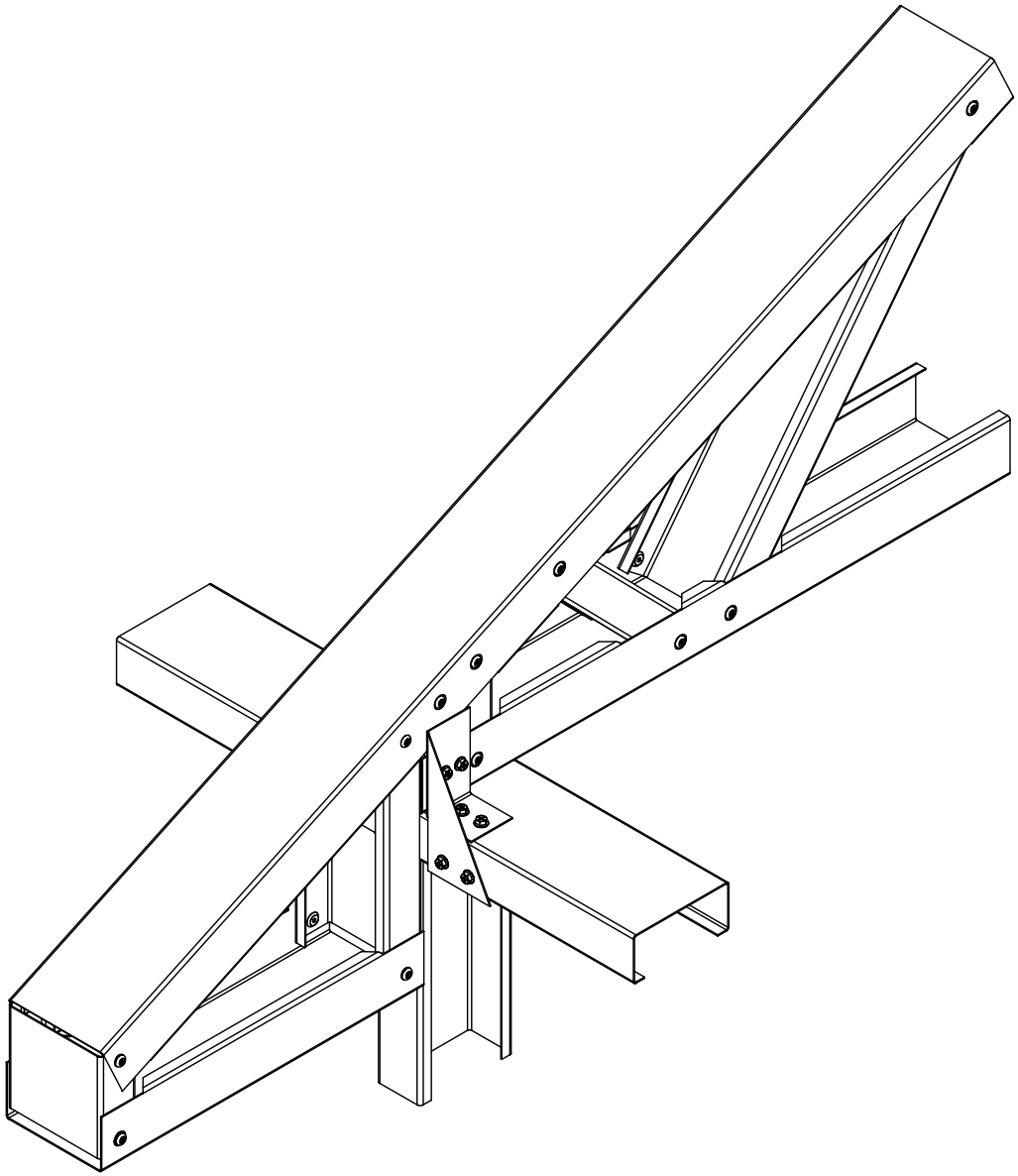

Truss to Top Plate Connection

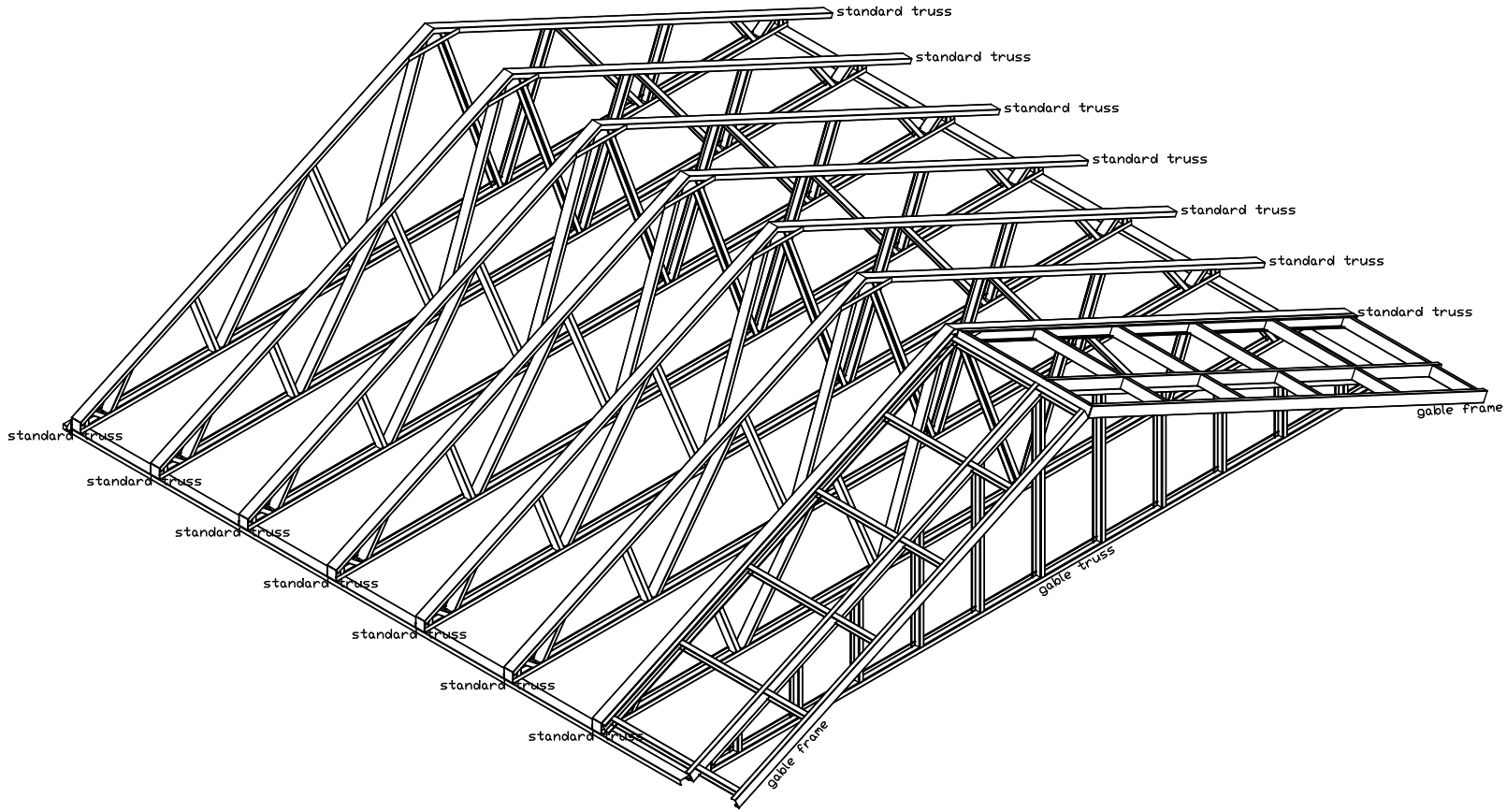
standard truss
standard truss
standard truss
standard truss
standard truss
standard truss
standard truss
gable frame
gable truss
gable frame
standard truss
standard truss
standard truss
standard truss
standard truss
standard truss
standard truss

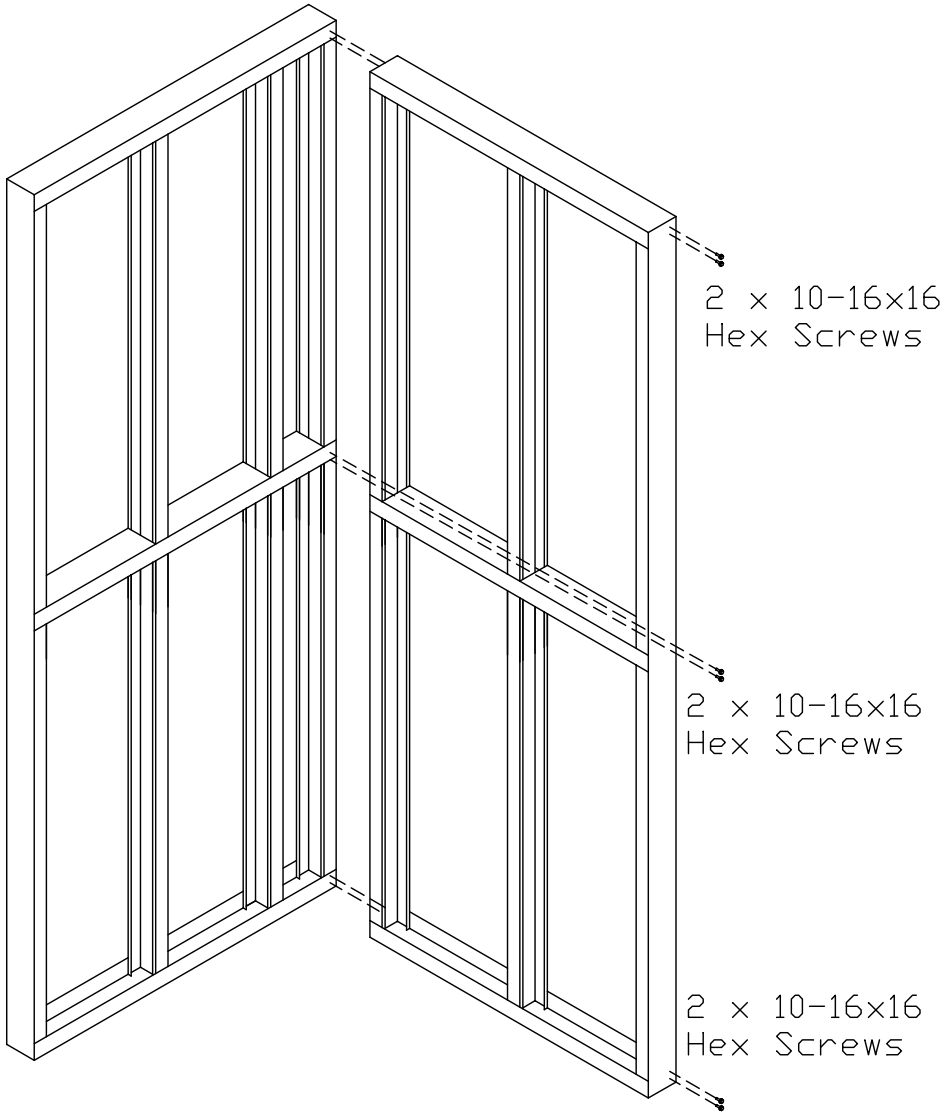
2 x 10-16x16
Hex Screws
2 x 10-16x16
Hex Screws
2 x 10-16x16
Hex Screws

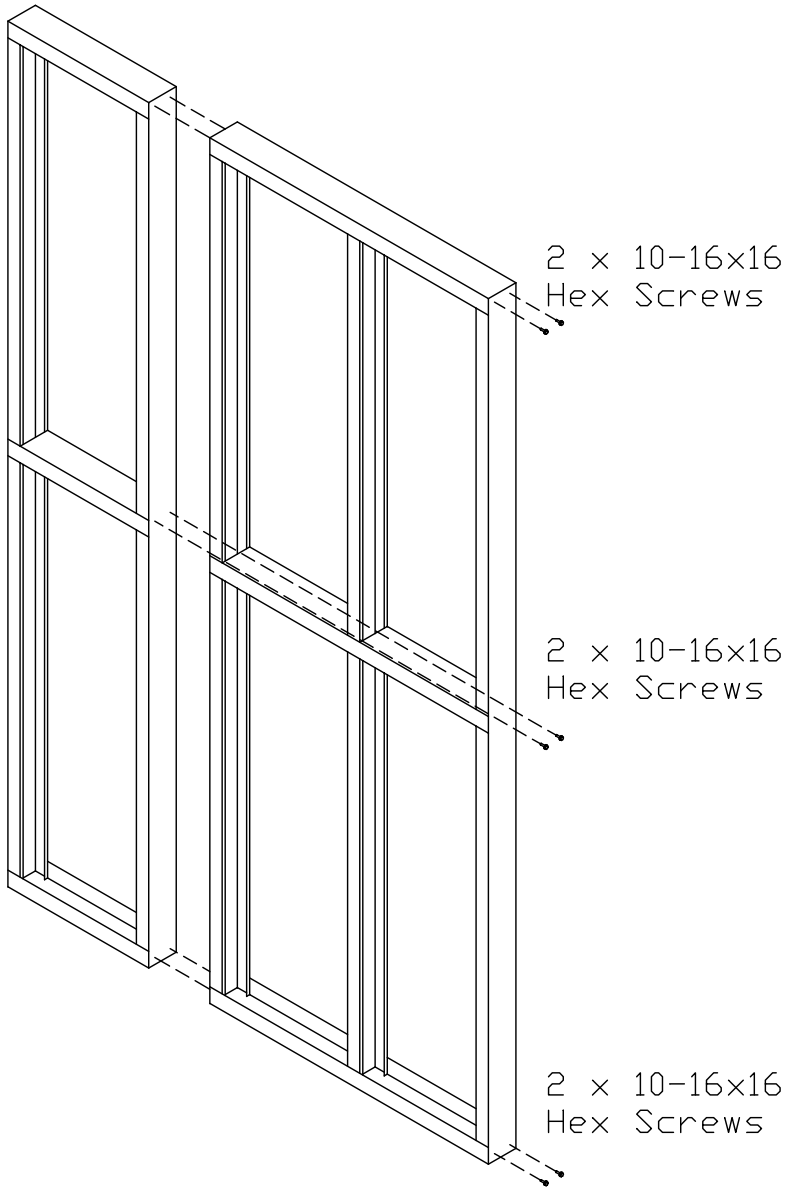
2 x 10-16x16
Hex Screws
2 x 10-16x16
Hex Screws
2 x 10-16x16
Hex Screws

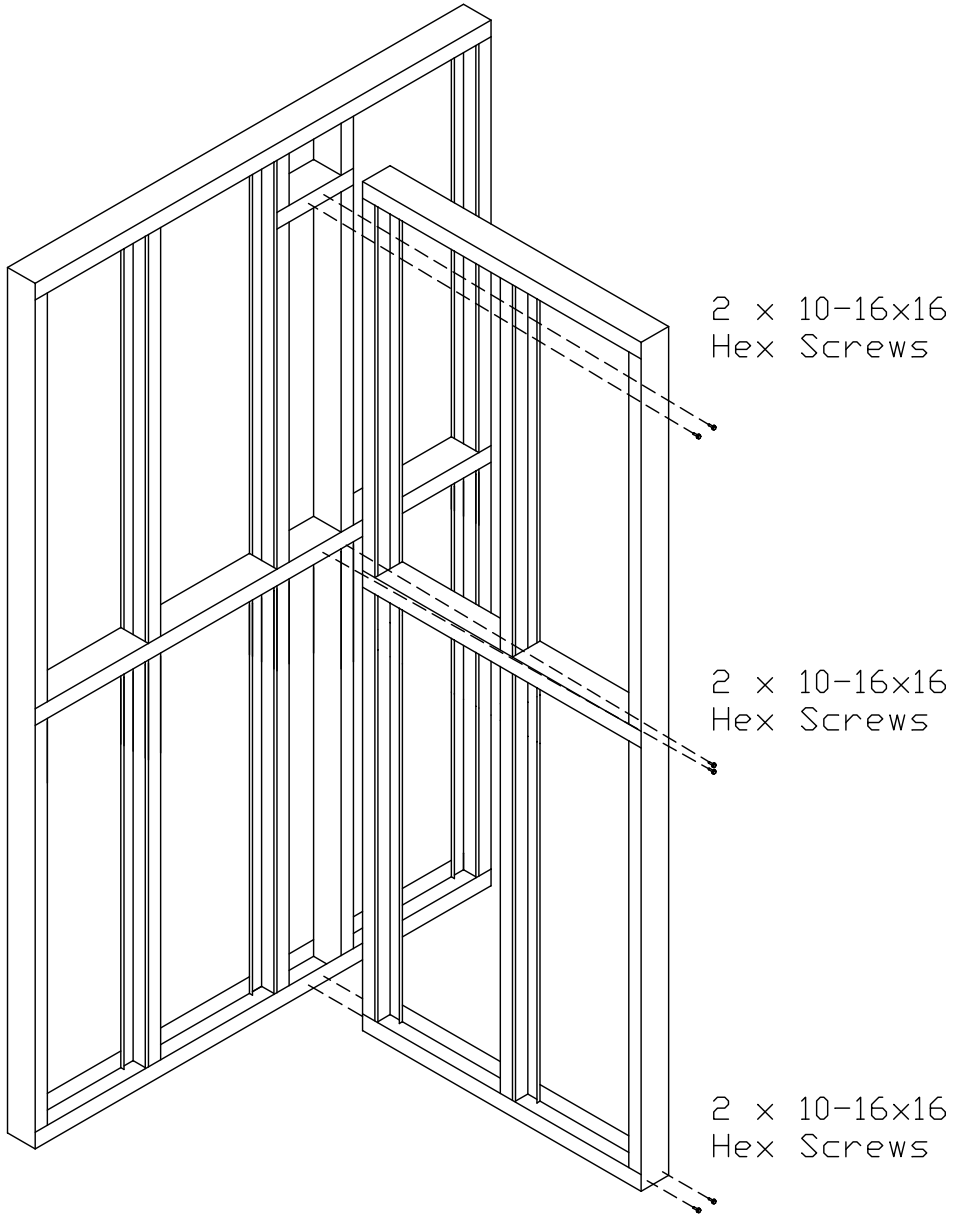
2 x 10-16x16
Hex Screws
2 x 10-16x16
Hex Screws
2 x 10-16x16
Hex Screws

Truss Parts Summary	
#10-16x16 Tek	140

Truss Materials Summary			
T1	S9075	4	4713
B2	S9075	4	4713
W3	SC9075	4	1056
W4	SC9075	4	1056
W5	SC9075	4	1056
W6	SC9075	4	1056
W7	SC9075	4	1056
W8	SC9075	4	1056
W9	SC9075	4	1056
R10	S9075	4	4713

Truss Weight = 23.5kg

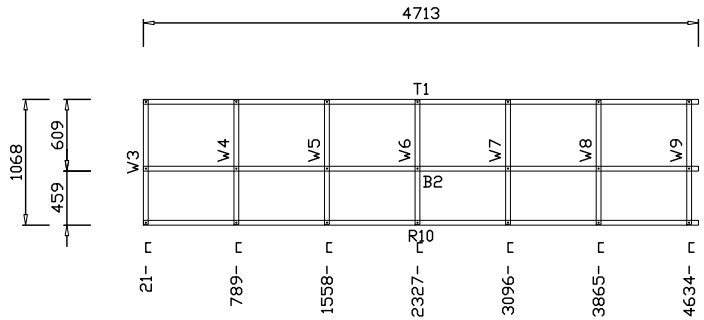

Mark As GF1 Qty = 4

W35N-SHEET@0.120-610

Analysis Status = Support Failure

Software Licenced for Unlimited Use

Software Licenced for Unlimited Use

Truss Parts Summary	
#10-16x16 Tek	770

Minimum Fasteners per Connection = 2
Unless Otherwise Marked

Truss Materials Summary			
T1	S9095	11	4765
T2	S9095	11	4765
B3	S9095	11	7316
W4	S9095	11	101
W5	S9095	11	125
W6	S9095	11	218
W7	S9095	11	436
W8	S9095	11	823
W9	S9095	11	1712
W10	S9095	11	1575
W11	S9095	11	2269
W12	S9095	11	530
W13	S9095	11	2269
W14	S9095	11	1575
W15	S9095	11	1712
W16	S9095	11	823
W17	S9095	11	436
W18	S9095	11	218
W19	S9095	11	125
W20	S9095	11	101

Truss Weight = 44.0kg

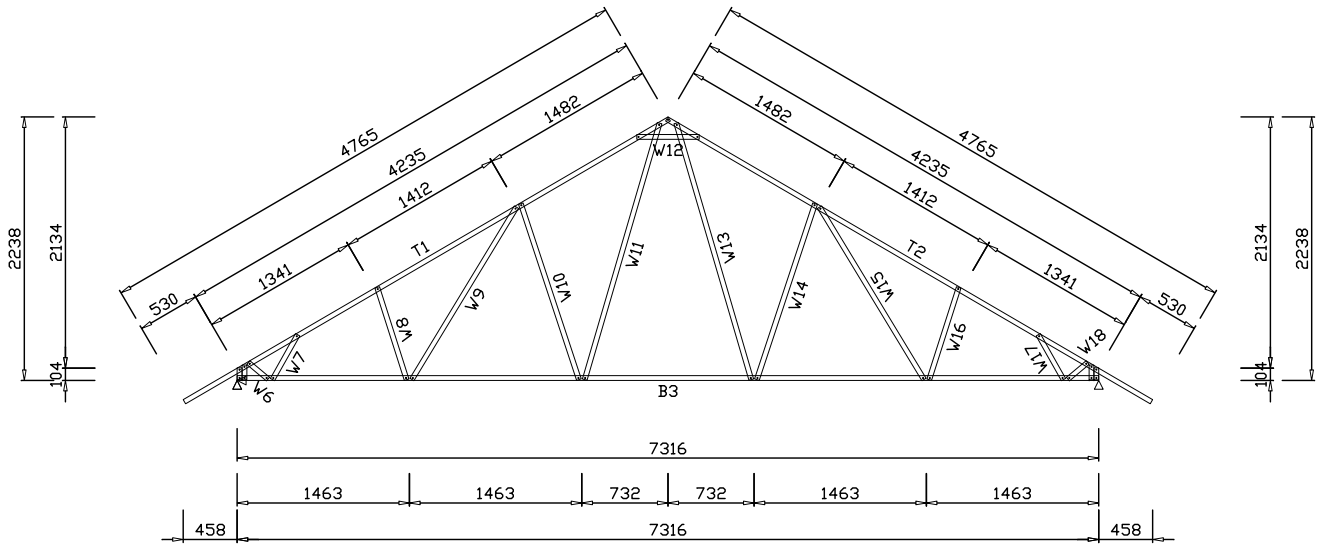

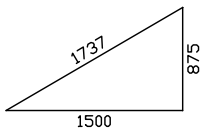

Mark As N1 Qty = 11
W35N-SHEET-S0.120-610-30.256°
Analysis Status = Passed 90%
FS=7316 AP=3658 AH=2238

Software Licenced for Unlimited Use
Software Licenced for Unlimited Use

Truss Parts Summary	
#10-16x16 Tek	120

Minimum Fasteners per Connection = 2
Unless Otherwise Marked

Truss Materials Summary			
T1	S9075	2	4028
T2	S9075	2	4028
B3	S9075	2	6959
W4	SC9075	2	101
W5	SC9075	2	427
W6	SC9075	2	765
W7	SC9075	2	1104
W8	SC9075	2	1442
W9	SC9075	2	1780
W10	SC9075	2	1871
W11	SC9075	2	2119
W12	SC9075	2	1871
W13	SC9075	2	1780
W14	SC9075	2	1442
W15	SC9075	2	1104
W16	SC9075	2	765
W17	SC9075	2	427
W18	SC9075	2	101

Truss Weight = 35.0kg

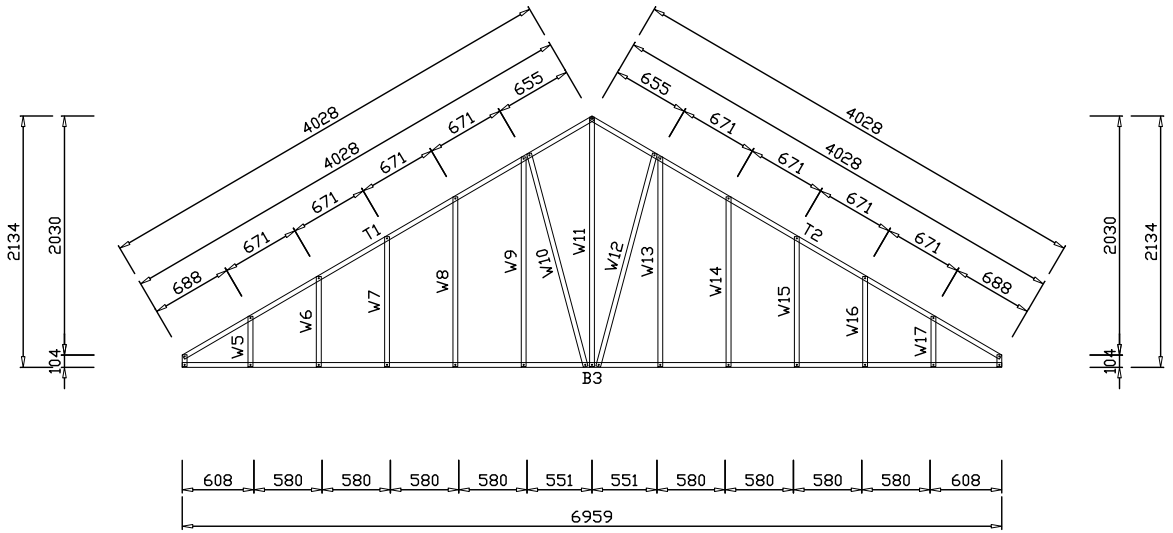

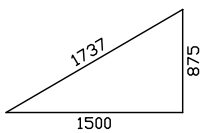

Mark As G1 Qty = 2
W35N-SHEET-S0.120-610-30.256°
Analysis Status = Passed
FS=6959 AP=3480 AH=2134

Software Licenced for Unlimited Use
Software Licenced for Unlimited Use

Diagonal = 3886

Panel Cutting List		
140S41-075-550 Plate	2	1187
140S41-075-550 Plate	2	2411
140S41-075-550 Plate	2	245
140S41-075-550 Plate	2	991
140S41-075-550 Stud	6	3042
140S41-075-550 Stud	4	445
140S41-075-550 Stud	2	451
140S41-075-550 Stud	3	756
10g x 19mm XDrive		92

Panel Weight 48kg

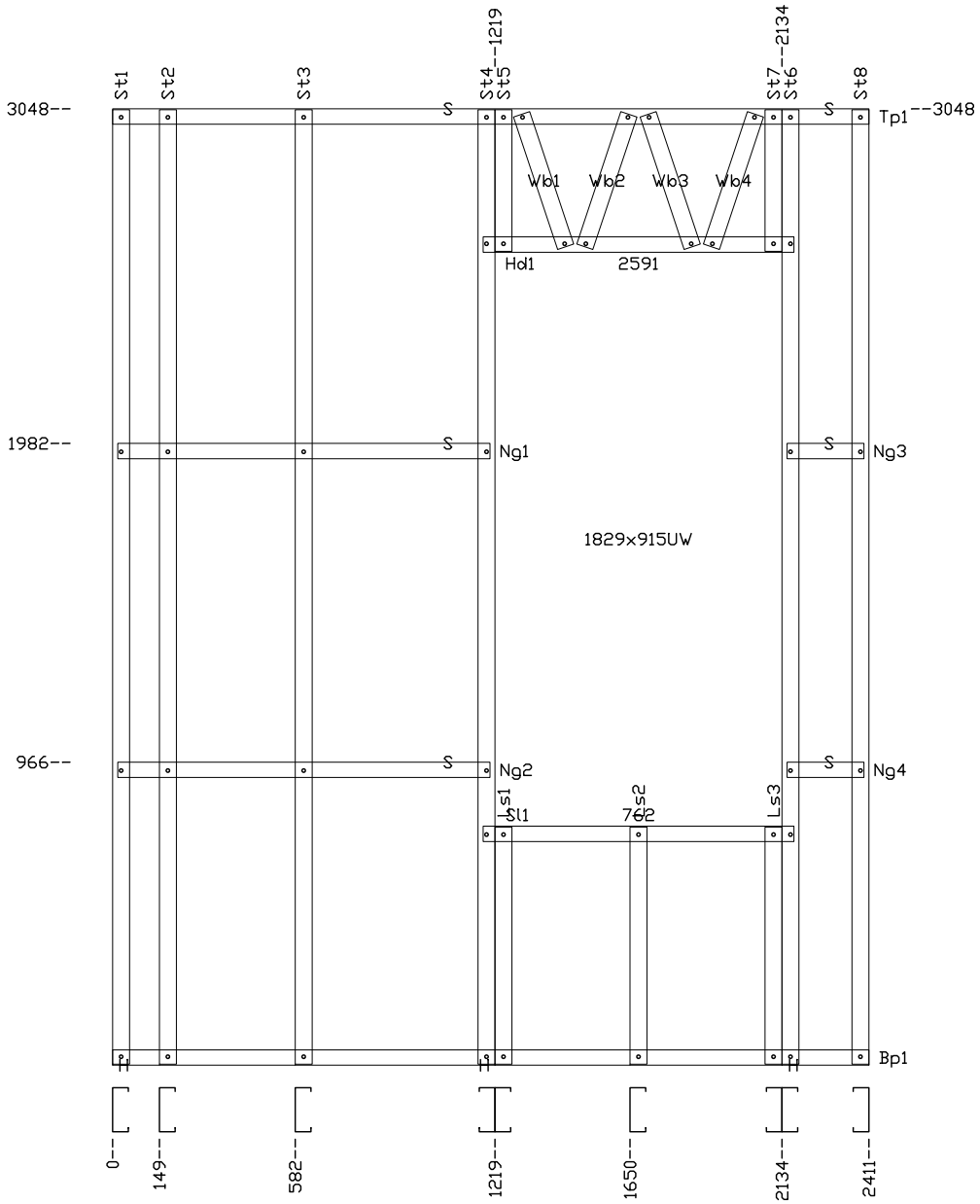

Wall L1

<<< Joins L2

Joins L6 >>>

Diagonal = 3799

Panel Cutting List		
140S41-075-550 Plate	1	1047
140S41-075-550 Plate	1	2235
140S41-075-550 Plate	2	2267
140S41-075-550 Plate	1	241
140S41-075-550 Plate	2	991
140S41-075-550 Stud	3	1315
140S41-075-550 Stud	5	3042
140S41-075-550 Stud	2	349
140S41-075-550 Stud	4	350
10g x 19mm XDrive		90

Panel Weight 45kg

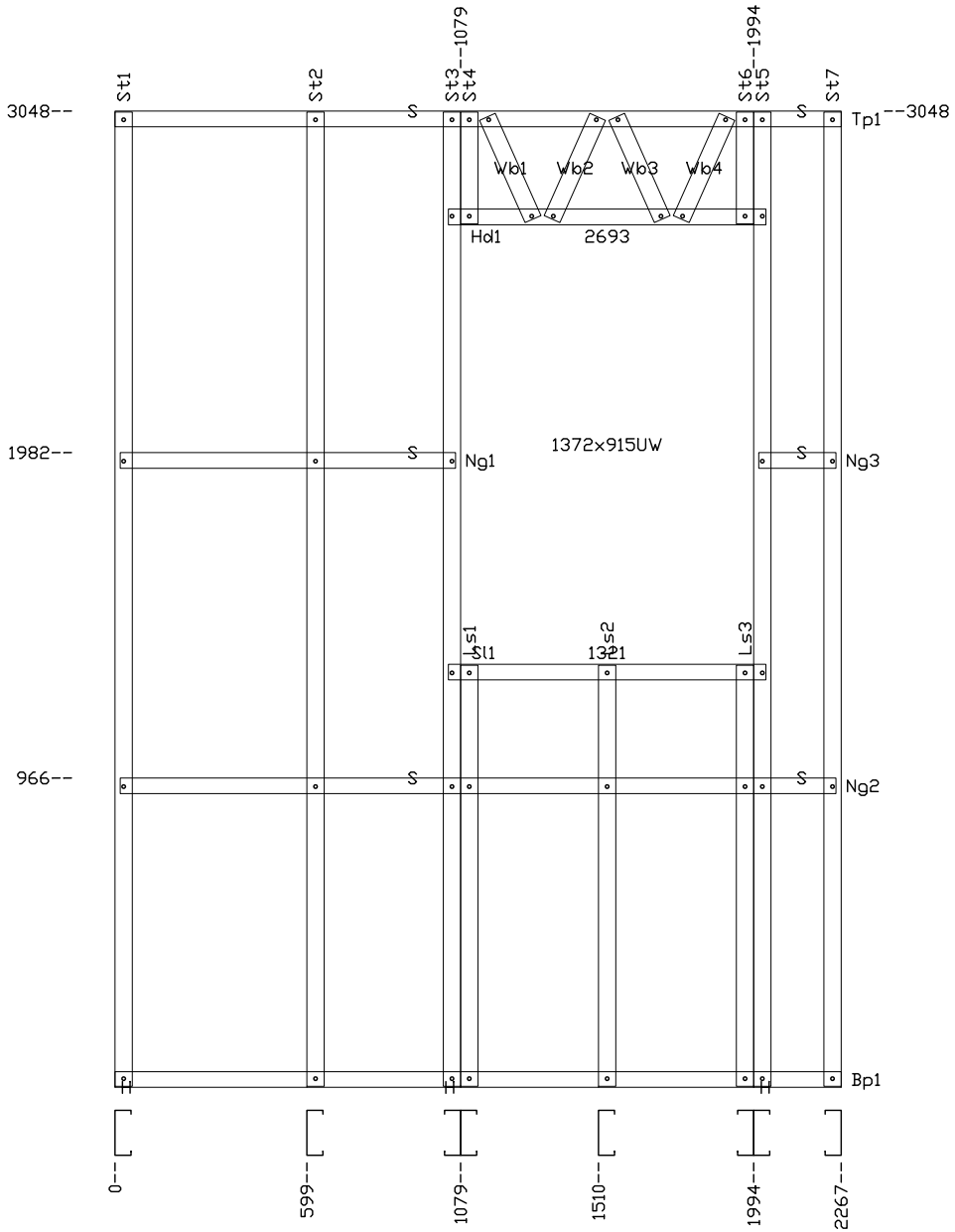

Wall L2

<<< Joins L1

Joins L5 >>>

Diagonal = 3903

Panel Cutting List		
140S41-075-550 Plate	2	2406
140S41-075-550 Plate	2	2438
140S41-075-550 Stud	5	3042
10g x 19mm XDrive		40

Panel Weight 36kg

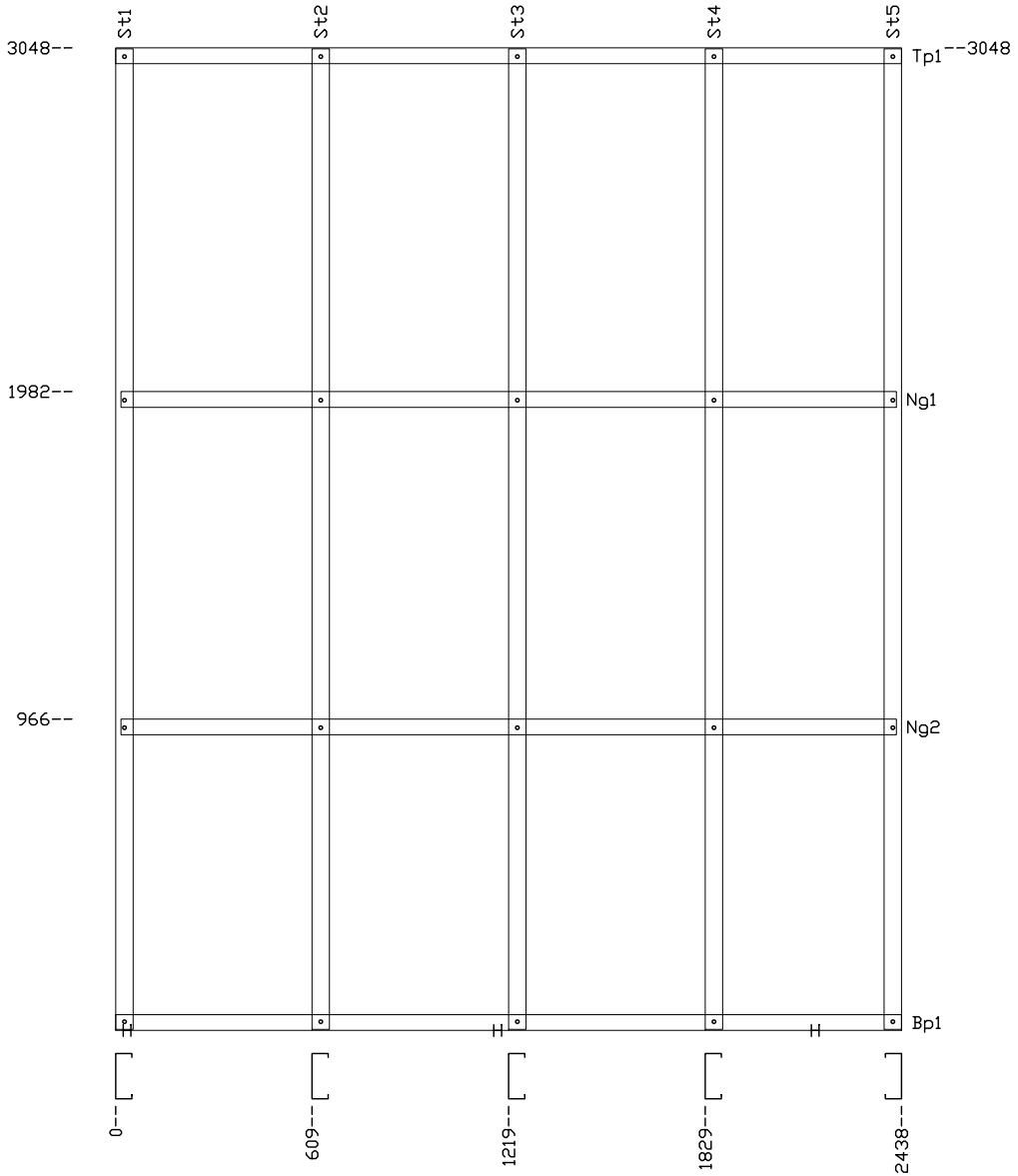

<<< Joins L2

Joins L6 >>>

Wall L3

Diagonal = 3903

Panel Cutting List		
140S41-075-550 Plate	2	2438
140S41-075-550 Plate	2	701
140S41-075-550 Plate	2	759
140S41-075-550 Plate	3	991
140S41-075-550 Stud	4	3042
140S41-075-550 Stud	2	407
140S41-075-550 Stud	1	410
140S41-075-550 Stud	4	582
140S41-075-550 Stud	2	594
10g x 19mm XDrive		80

Panel Weight 40kg

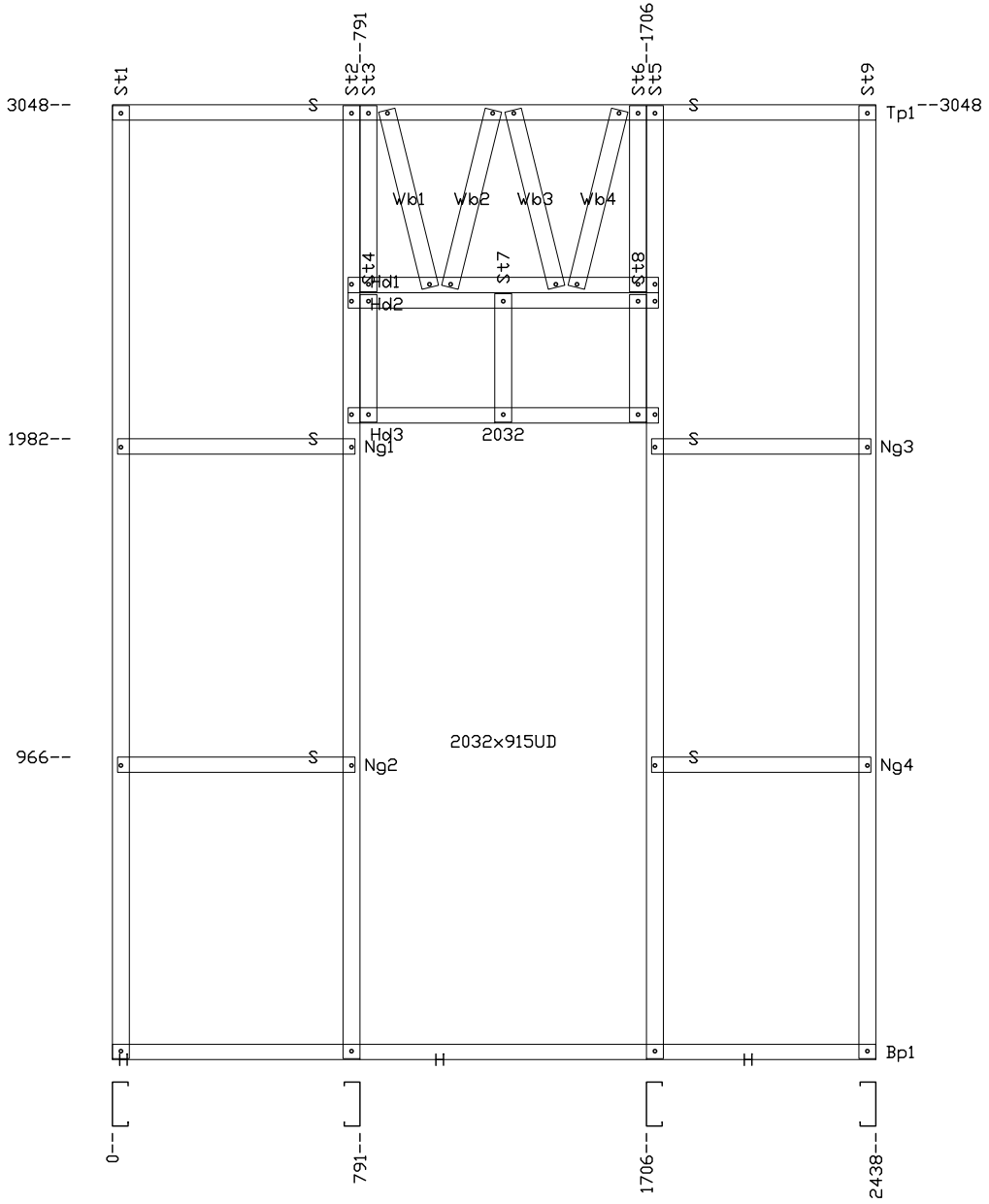

<<< Joins L1

Joins L5 >>>

Wall L4

Diagonal = 3918

Panel Cutting List		
140S41-075-550 Plate	2	1187
140S41-075-550 Plate	2	2461
140S41-075-550 Plate	2	295
140S41-075-550 Plate	2	991
140S41-075-550 Stud	6	3042
140S41-075-550 Stud	4	445
140S41-075-550 Stud	2	451
140S41-075-550 Stud	3	756
10g x 19mm XDrive		92

Panel Weight 48kg

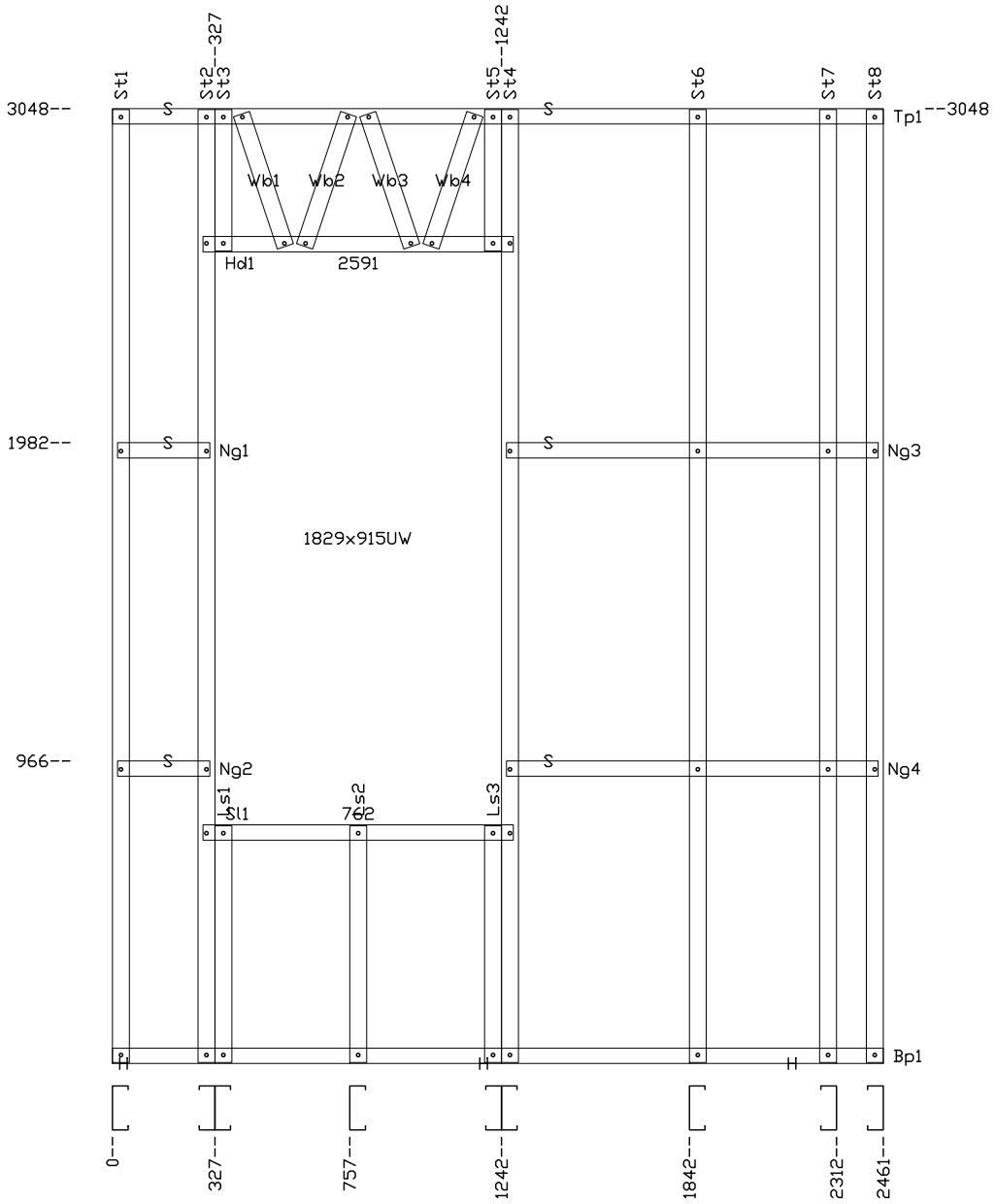

Wall L5

<<< Joins L2

Joins L6 >>>

Diagonal = 3834

Panel Cutting List			
140S41-075-550	Plate	1	1047
140S41-075-550	Plate	1	2293
140S41-075-550	Plate	2	2325
140S41-075-550	Plate	1	299
140S41-075-550	Plate	2	991
140S41-075-550	Stud	3	1315
140S41-075-550	Stud	5	3042
140S41-075-550	Stud	2	349
140S41-075-550	Stud	4	350
10g x 19mm XDrive			90

Panel Weight 46kg

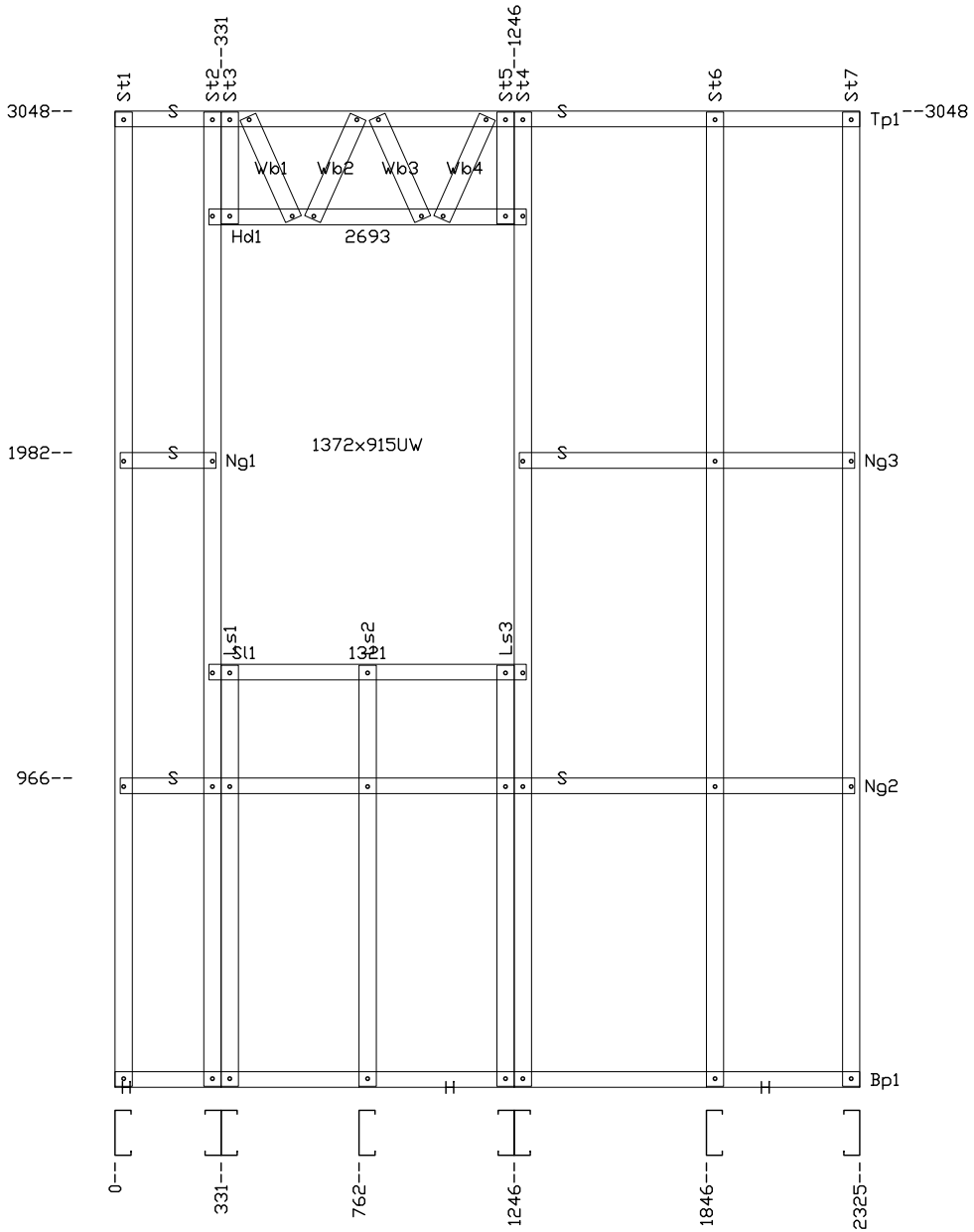

<<< Joins L1

Joins L5 >>>

Wall L6

Diagonal = 3555

Panel Cutting List		
140S41-075-550 Plate	2	1797
140S41-075-550 Plate	2	1829
140S41-075-550 Stud	6	3042
10g x 19mm XDrive		48

Panel Weight 37kg

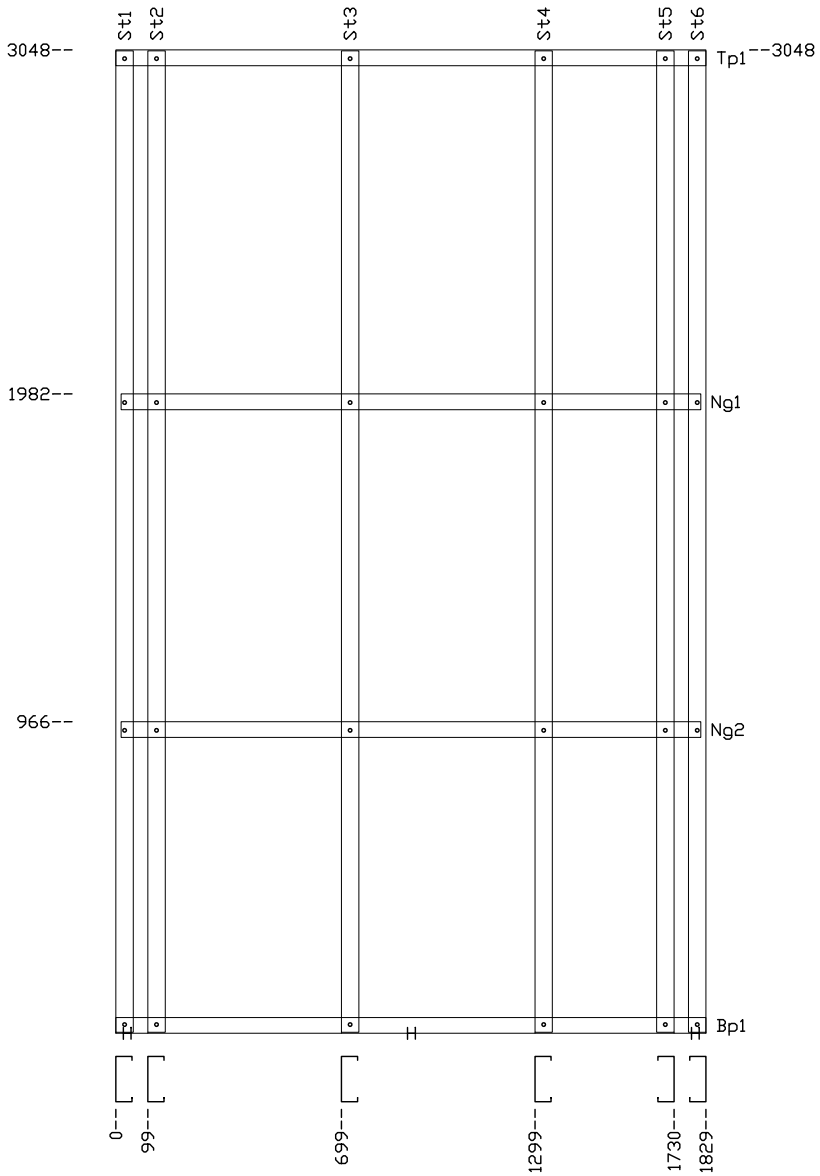

<<< Joins ????

Joins L8 >>>

Wall L7

Diagonal = 3154

Panel Cutting List		
140S41-075-550 Plate	2	779
140S41-075-550 Plate	2	811
140S41-075-550 Stud	3	3042
10g x 19mm XDrive		24

Panel Weight 18kg

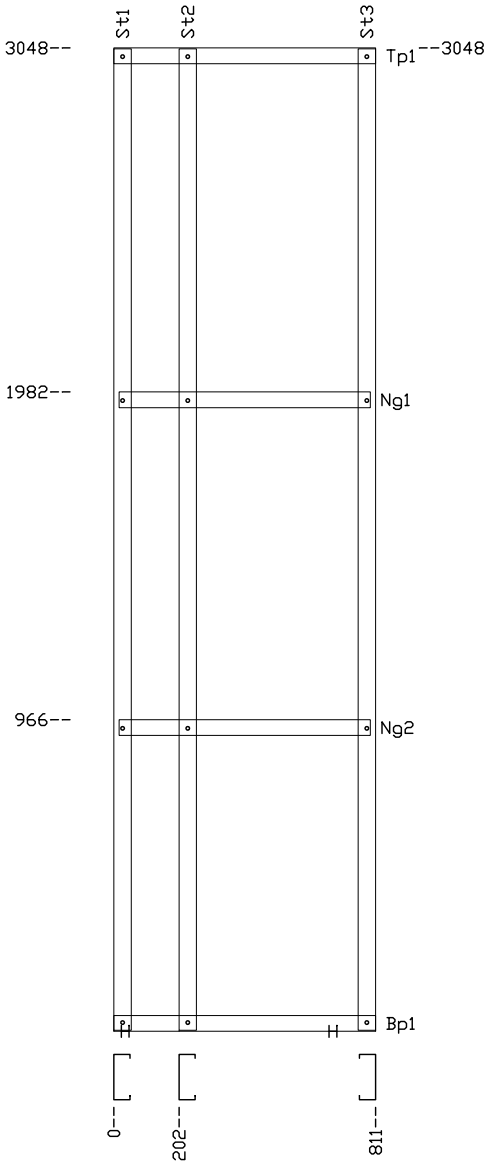

<<< Joins L3

Joins L6 >>>

Wall L8

Diagonal = 3886

Panel Cutting List		
140S41-075-550 Plate	1	1187
140S41-075-550 Plate	1	2379
140S41-075-550 Plate	2	2411
140S41-075-550 Plate	1	245
140S41-075-550 Plate	2	991
140S41-075-550 Stud	3	1315
140S41-075-550 Stud	6	3042
140S41-075-550 Stud	2	349
140S41-075-550 Stud	4	350
10g x 19mm XDrive		98

Panel Weight 51kg

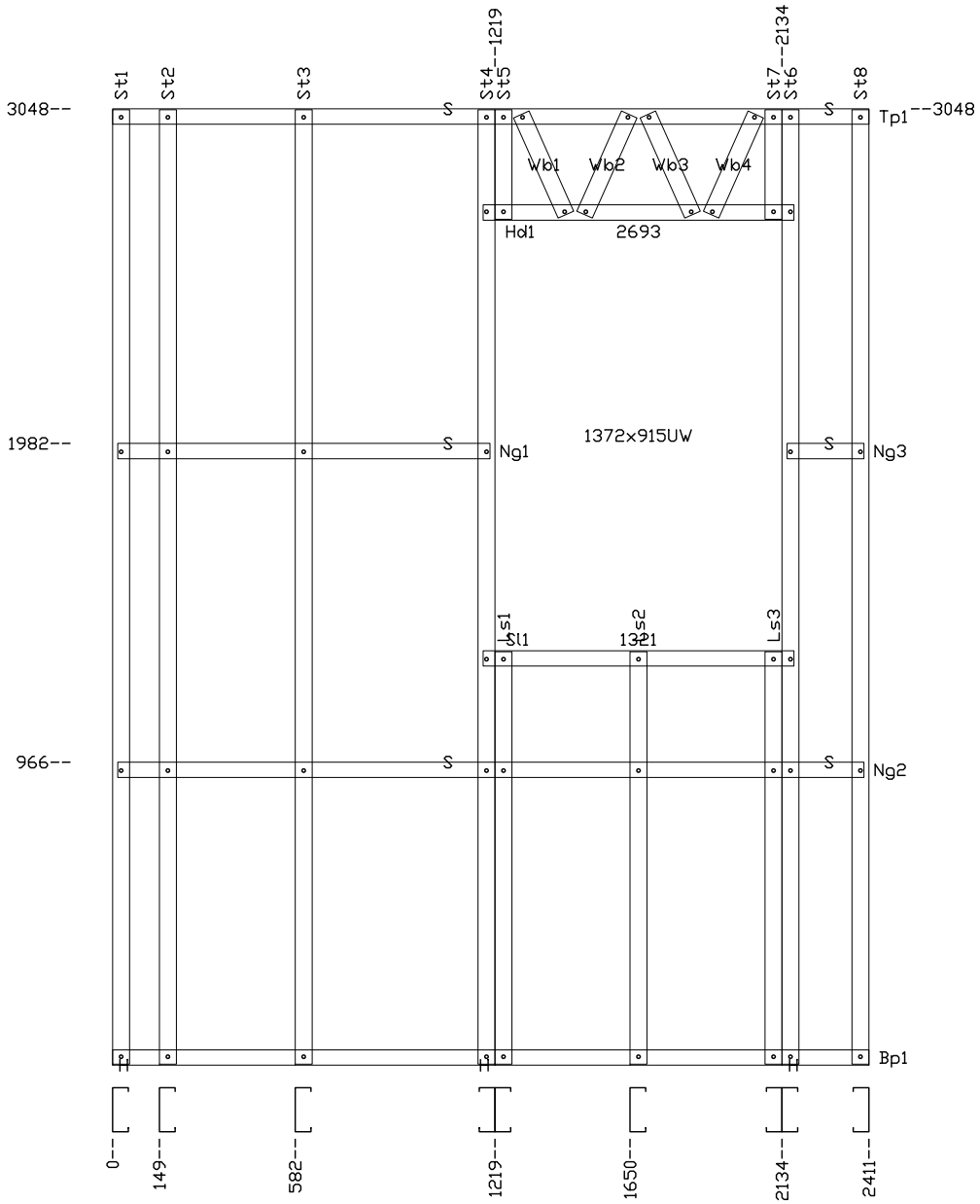

<<< Joins L2

Joins L6 >>>

Wall L9

Diagonal = 3799

Panel Cutting List		
140S41-075-550 Plate	2	2235
140S41-075-550 Plate	2	2267
140S41-075-550 Stud	5	3042
10g x 19mm XDrive		40

Panel Weight 35kg

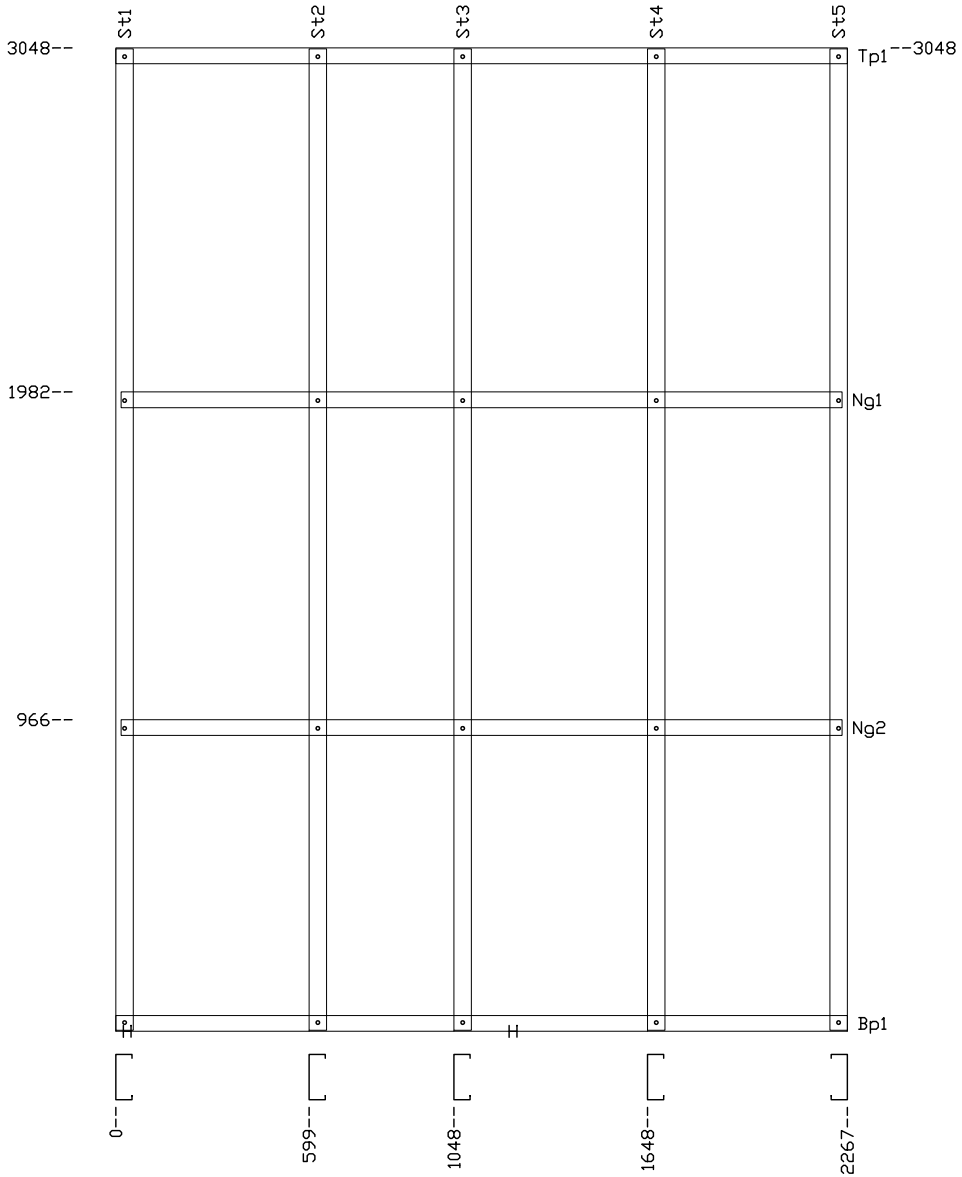

<<< Joins L1

Joins L5 >>>

Wall L10

Diagonal = 3831

Panel Cutting List		
140S41-075-550 Plate	3	1043
140S41-075-550 Plate	2	2321
140S41-075-550 Plate	2	511
140S41-075-550 Plate	2	882
140S41-075-550 Stud	6	3042
140S41-075-550 Stud	2	407
140S41-075-550 Stud	1	410
140S41-075-550 Stud	4	579
140S41-075-550 Stud	2	594
10g x 19mm XDrive		102

Panel Weight 49kg

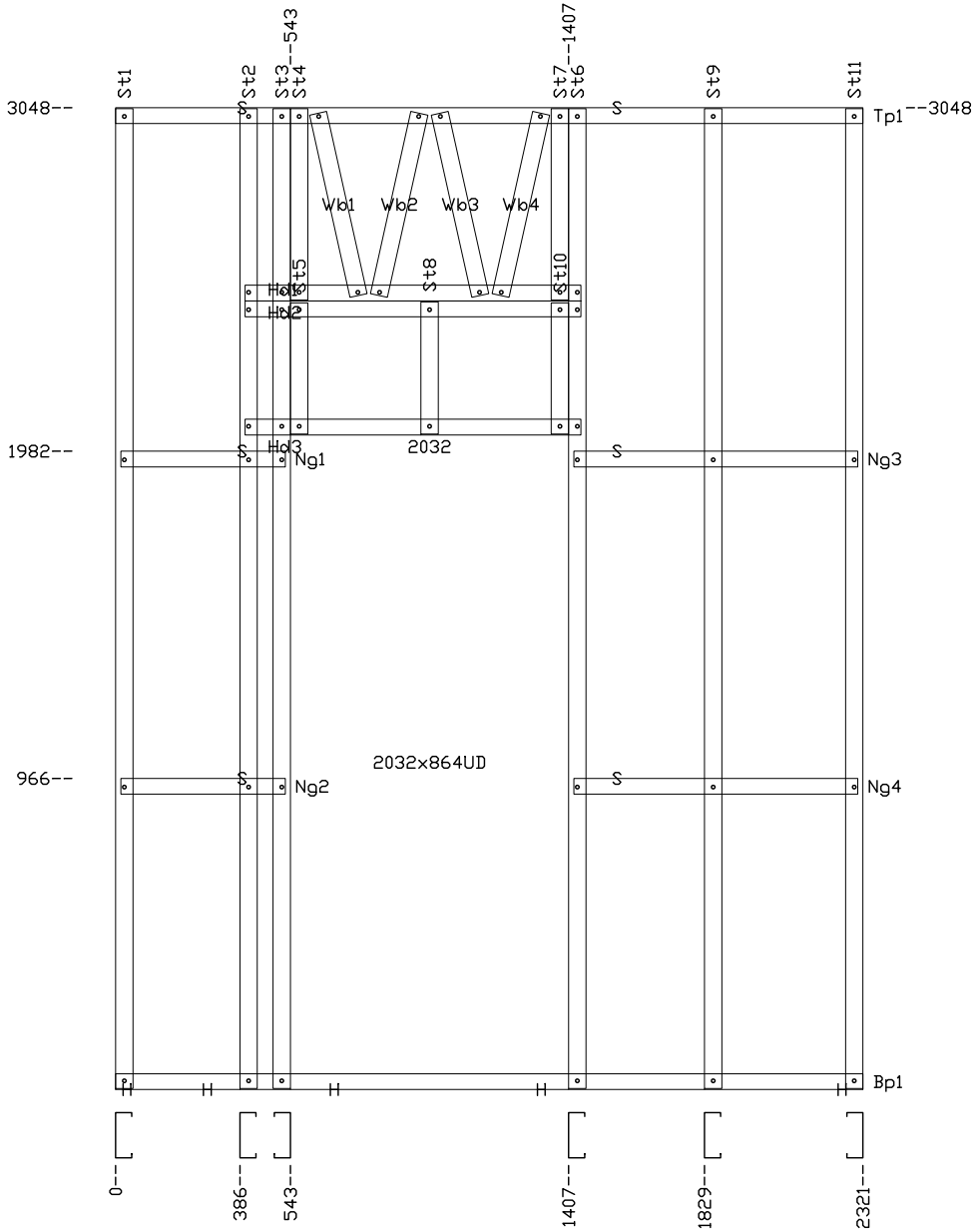

Wall L11

<<< Joins L3

Joins L6 >>>

Diagonal = 3154

Panel Cutting List		
140S41-075-550 Plate	2	779
140S41-075-550 Plate	2	811
140S41-075-550 Stud	3	3042
10g x 19mm XDrive		24

Panel Weight 18kg

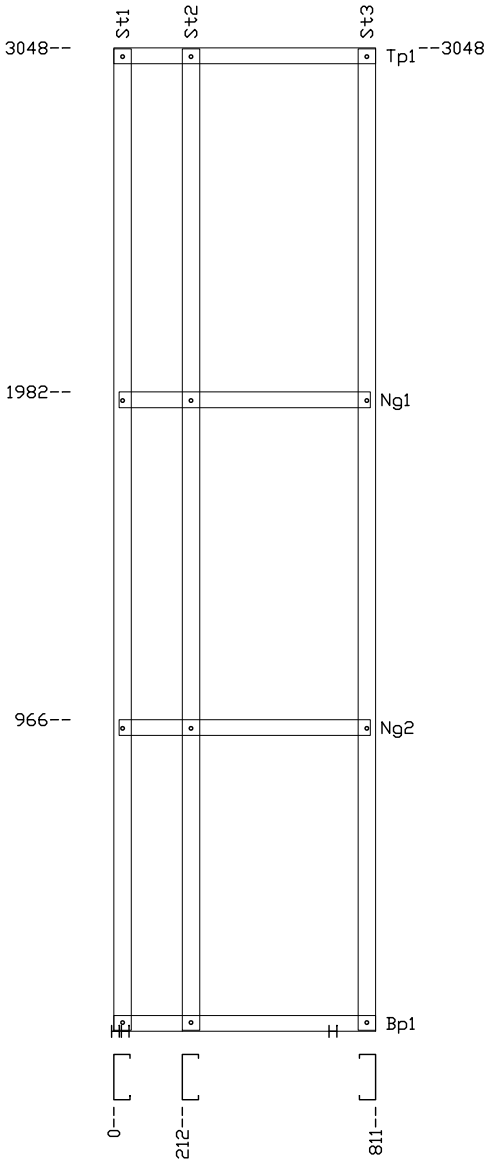

<<< Joins L3

Joins L6 >>>

Wall L12

Diagonal = 3800

Panel Cutting List		
140S41-075-550 Plate	2	2269
140S41-075-550 Plate	2	395
140S41-075-550 Plate	2	895
140S41-075-550 Plate	3	991
140S41-075-550 Stud	5	3042
140S41-075-550 Stud	2	407
140S41-075-550 Stud	1	410
140S41-075-550 Stud	4	582
140S41-075-550 Stud	2	594
10g x 19mm XDrive		88

Panel Weight 44kg

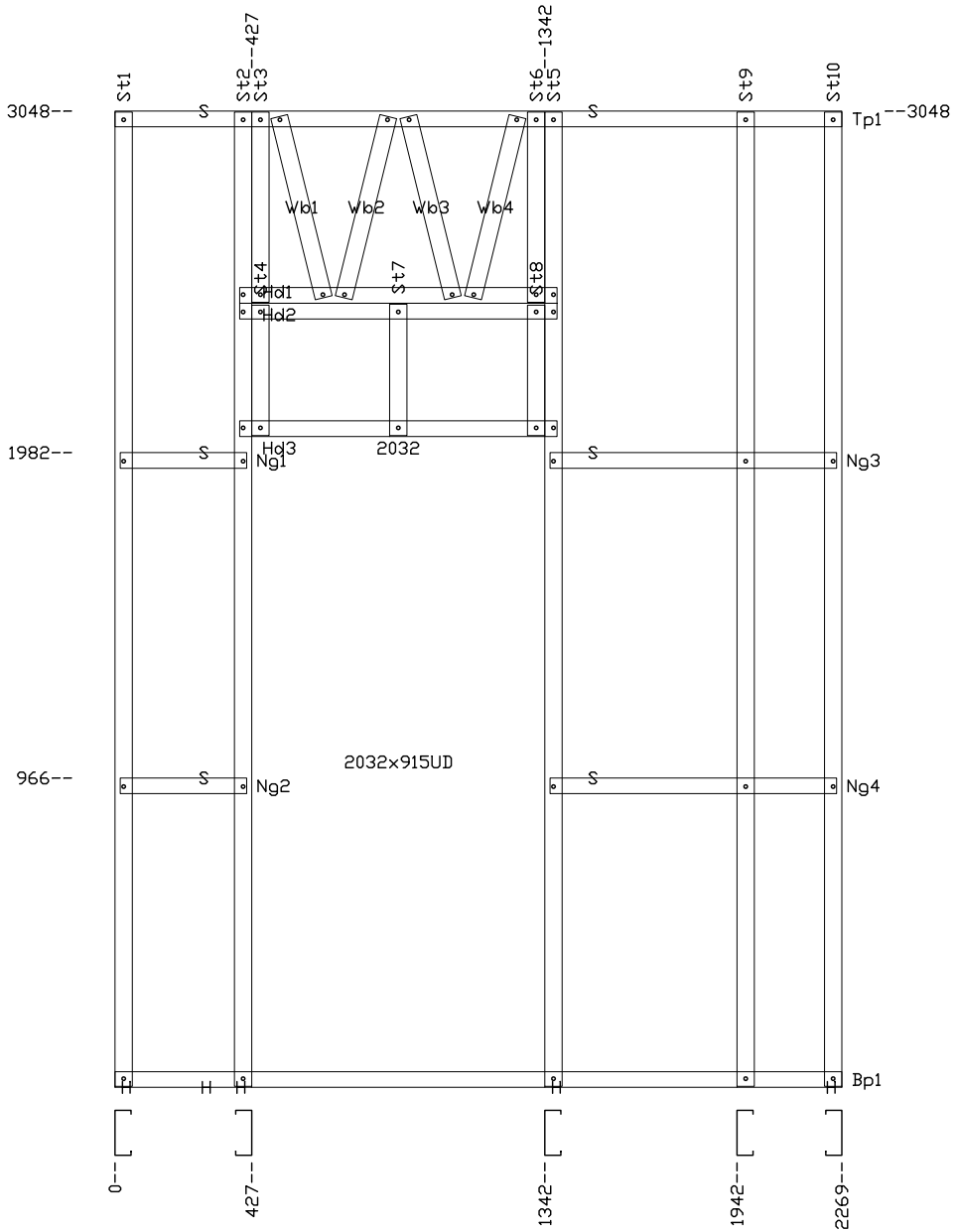

<<< Joins L3

Joins L5 >>>

Wall L13

Diagonal = 3903

Panel Cutting List		
140S41-075-550 Plate	2	2406
140S41-075-550 Plate	2	2438
140S41-075-550 Stud	6	3042
10g x 19mm XDrive		48

Panel Weight 41kg

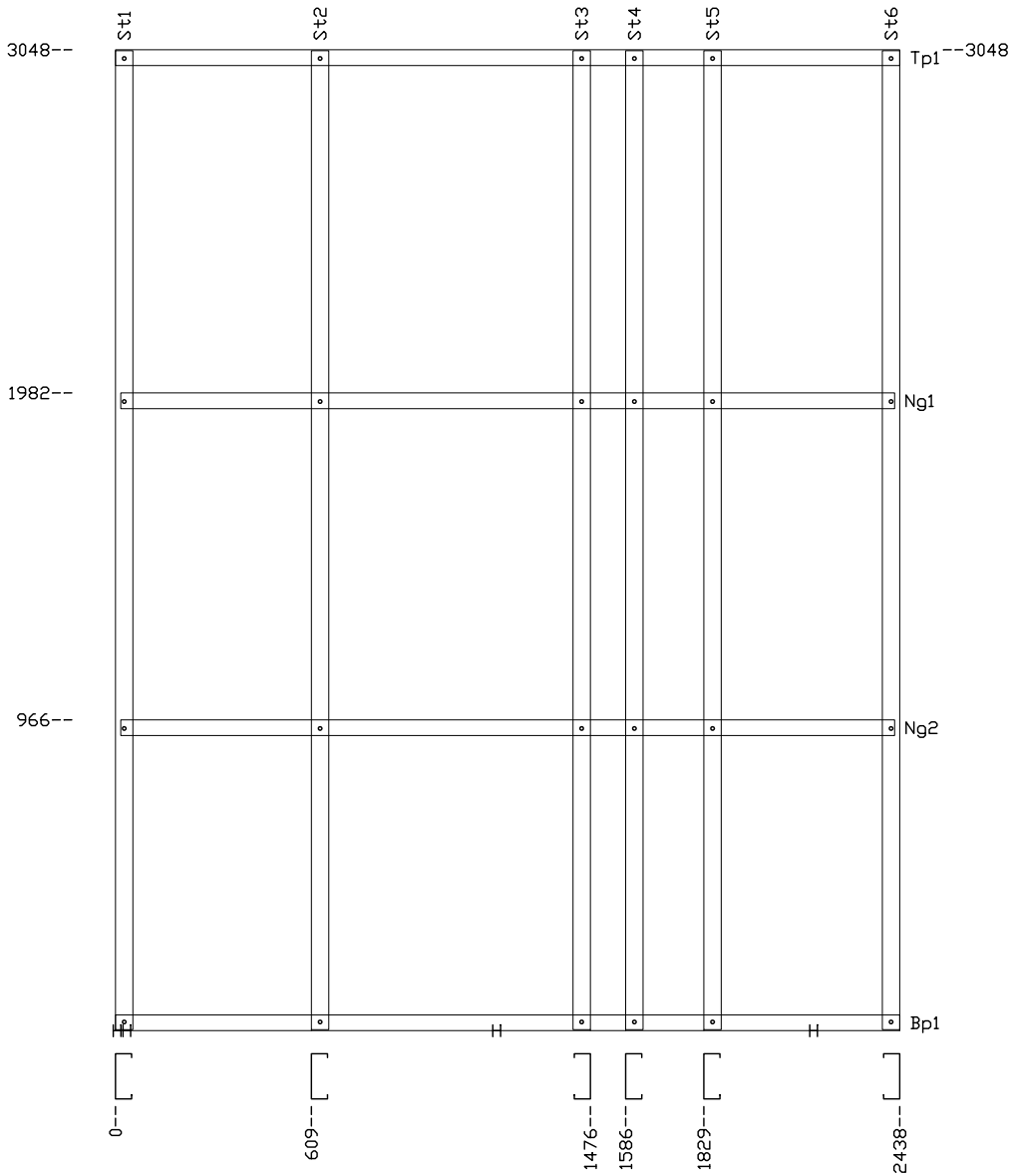

<<< Joins L2

Joins L6 >>>

Wall L14

Diagonal = 3831

Panel Cutting List		
140S41-075-550 Plate	2	2321
140S41-075-550 Plate	2	511
140S41-075-550 Plate	2	882
140S41-075-550 Plate	3	940
140S41-075-550 Stud	5	3042
140S41-075-550 Stud	2	407
140S41-075-550 Stud	1	410
140S41-075-550 Stud	4	579
140S41-075-550 Stud	2	594
10g x 19mm XDrive		88

Panel Weight 44kg

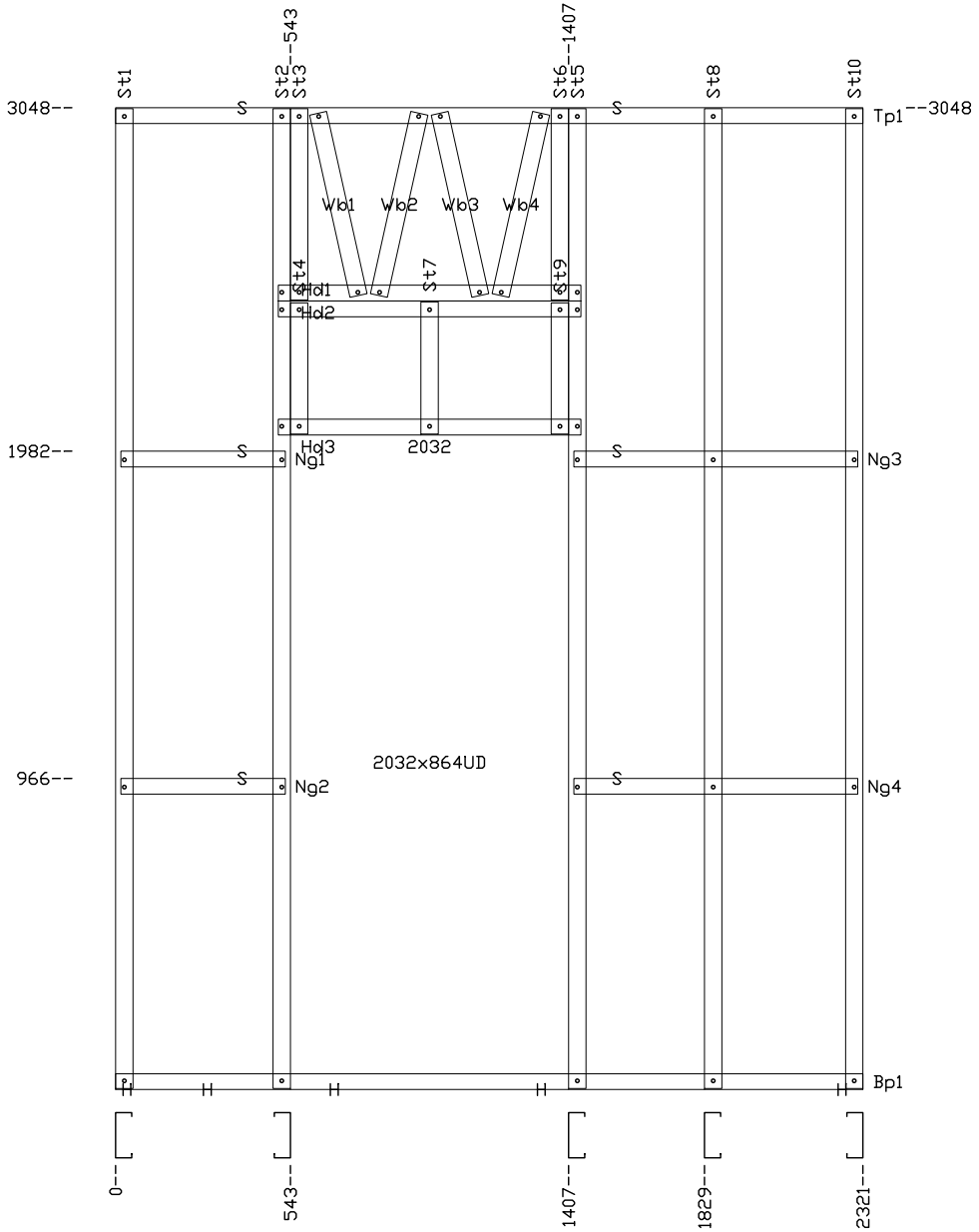

Wall L15

<<< Joins L3

Joins L6 >>>

Diagonal = 3921

Panel Cutting List		
140S41-075-550 Plate	2	2434
140S41-075-550 Plate	2	2466
140S41-075-550 Stud	7	3042
10g x 19mm XDrive		56

Panel Weight 45kg

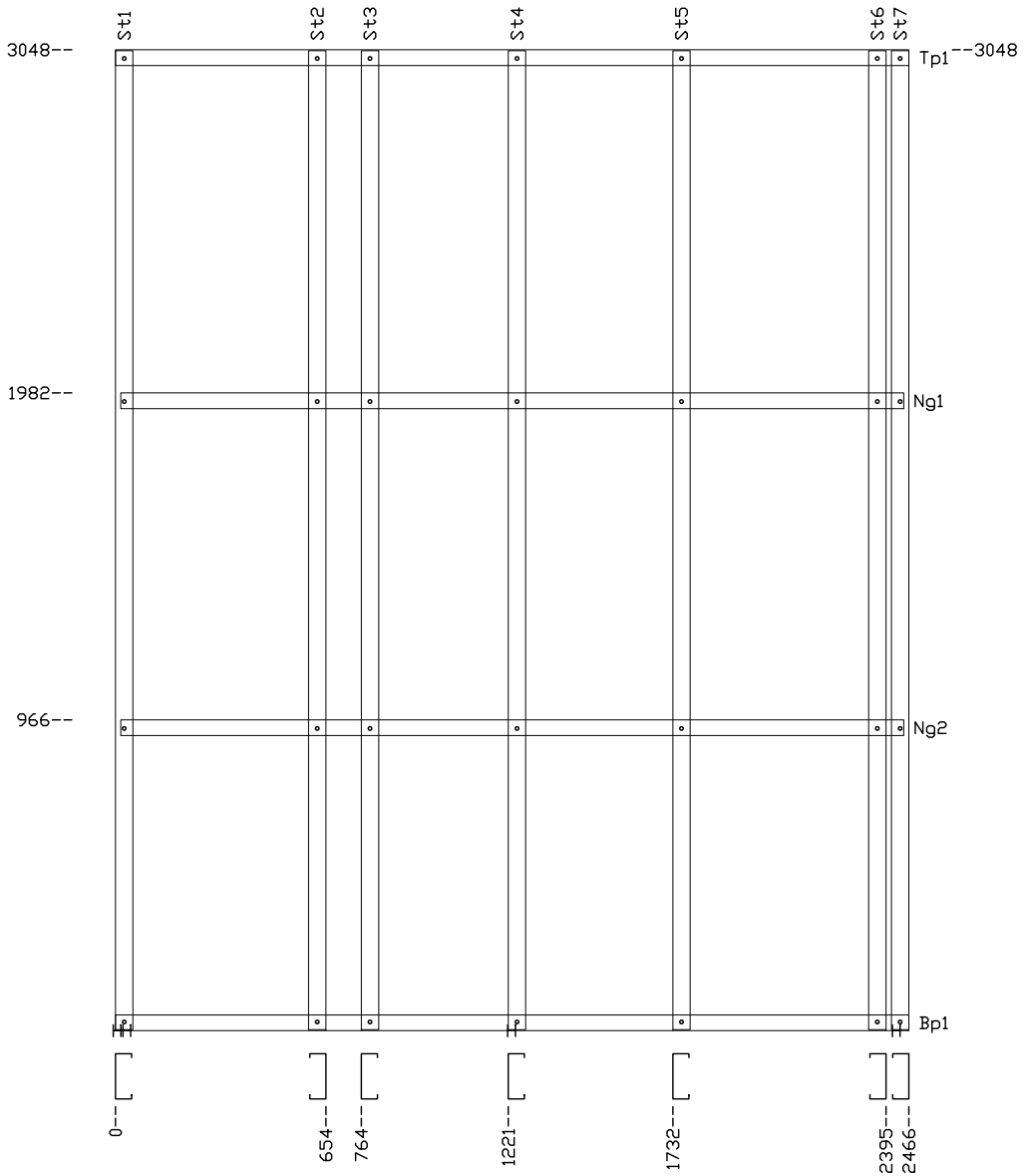

<<< Joins L1

Joins L5 >>>

Wall L16

Diagonal = 3918

Panel Cutting List		
140S41-075-550 Plate	1	1187
140S41-075-550 Plate	1	2429
140S41-075-550 Plate	2	2461
140S41-075-550 Plate	1	295
140S41-075-550 Plate	2	991
140S41-075-550 Stud	3	1315
140S41-075-550 Stud	6	3042
140S41-075-550 Stud	2	349
140S41-075-550 Stud	4	350
10g x 19mm XDrive		98

Panel Weight 51kg

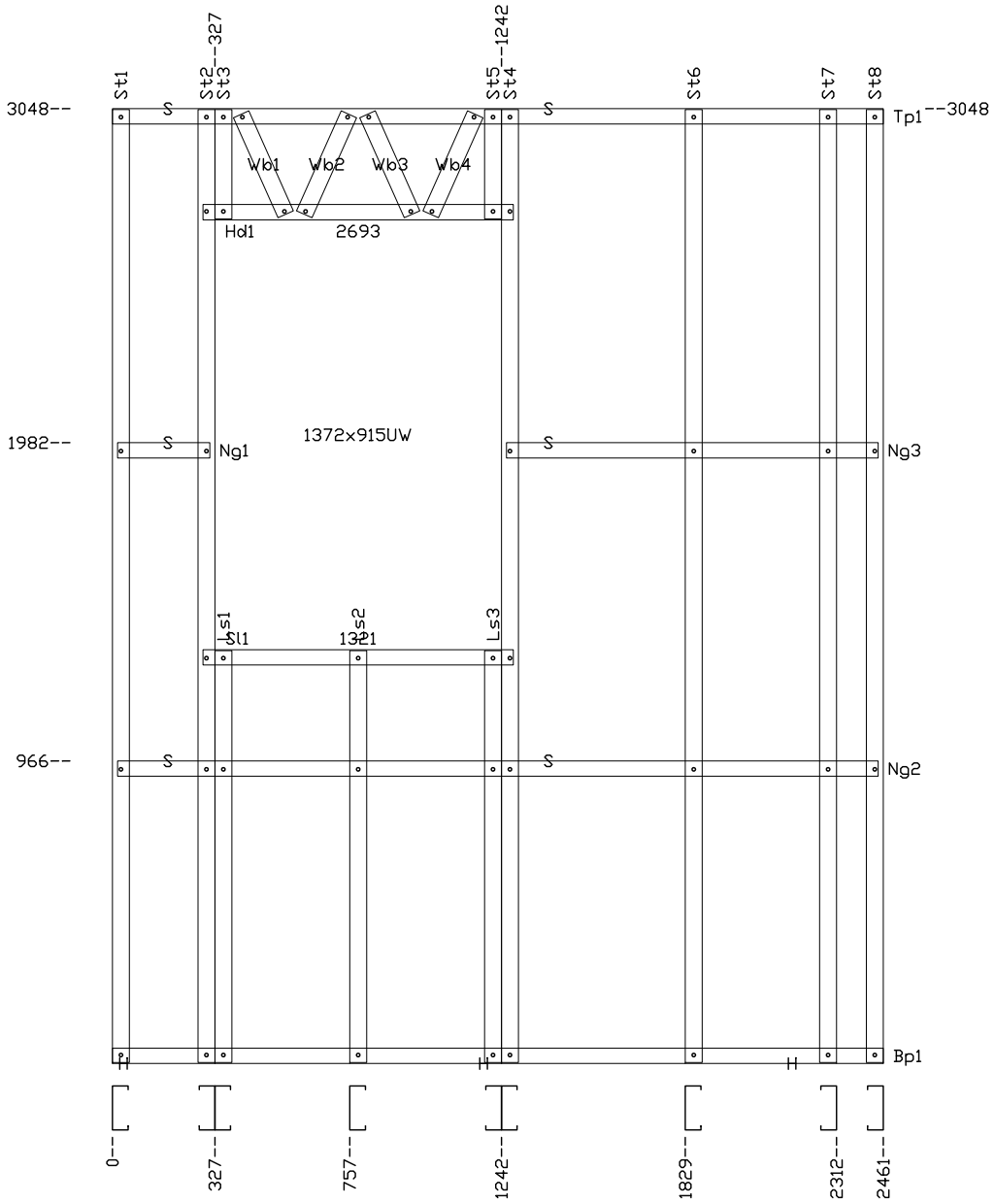

Wall L17

<<< Joins L2

Joins L6 >>>

Diagonal = 3817

Panel Cutting List		
140S41-075-550 Plate	3	1053
140S41-075-550 Plate	2	1235
140S41-075-550 Plate	2	2297
140S41-075-550 Plate	2	83
140S41-075-550 Stud	6	3042
140S41-075-550 Stud	2	407
140S41-075-550 Stud	1	410
140S41-075-550 Stud	4	582
140S41-075-550 Stud	2	594
10g x 19mm XDrive		102

Panel Weight 48kg

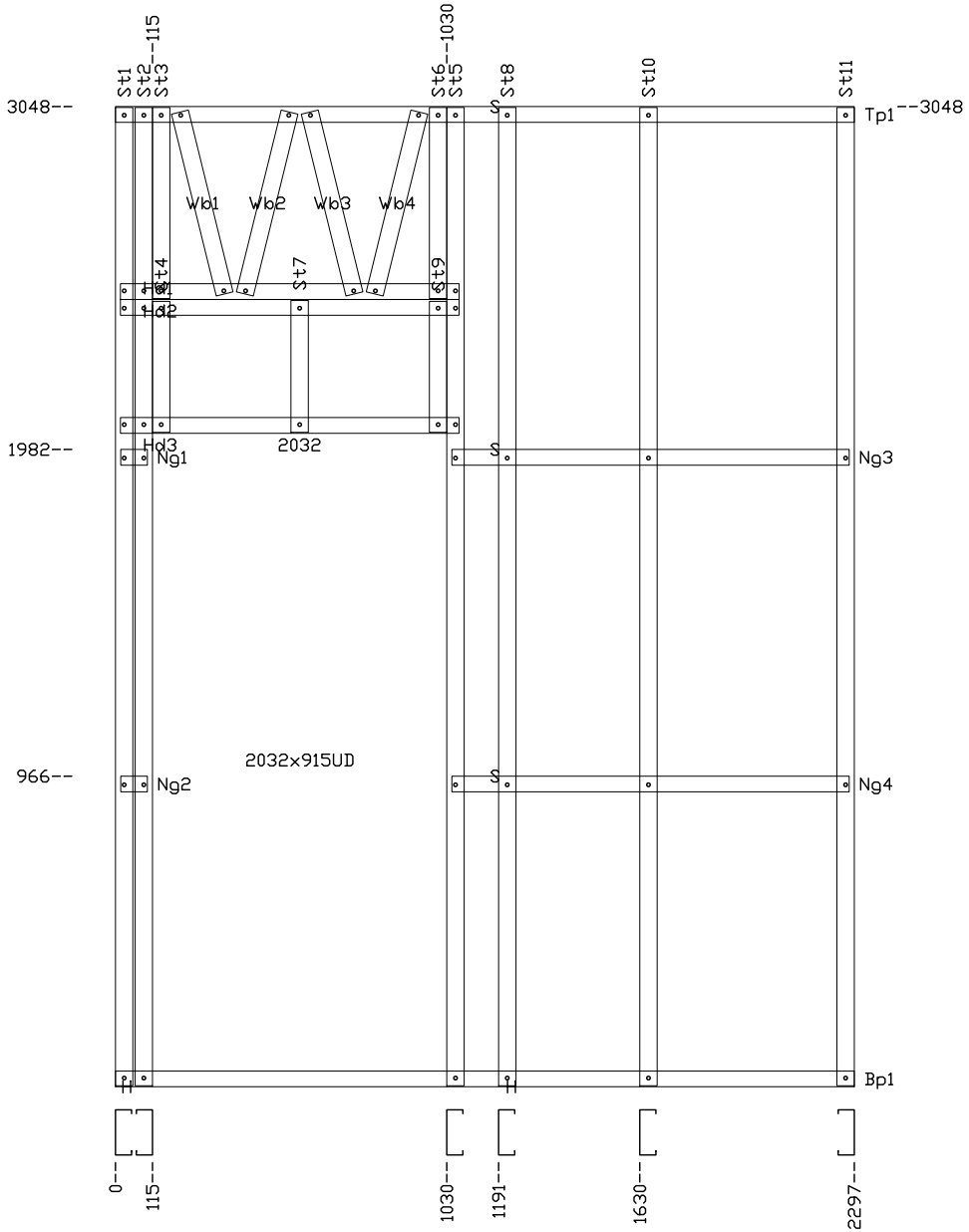

Wall L18

<<< Joins L1

Joins L5 >>>