PLAN VIEW

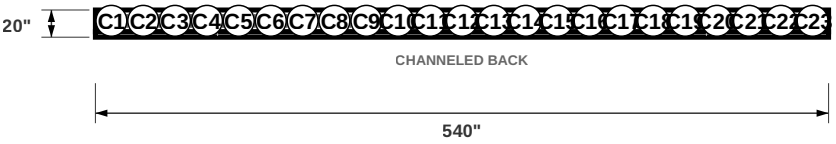

ISOMETRIC VIEW

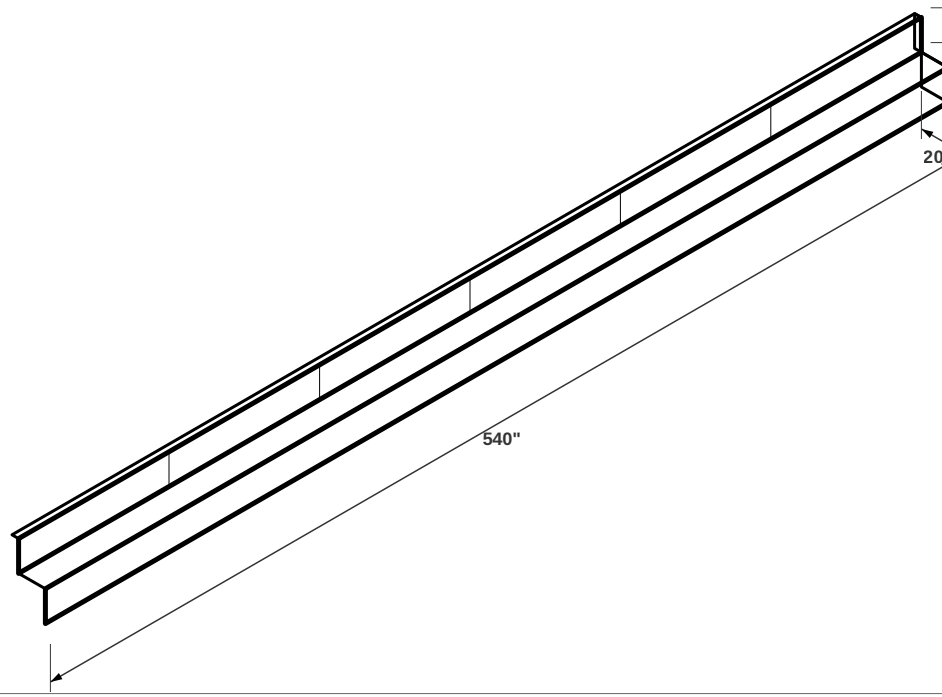

FRONT ELEVATION

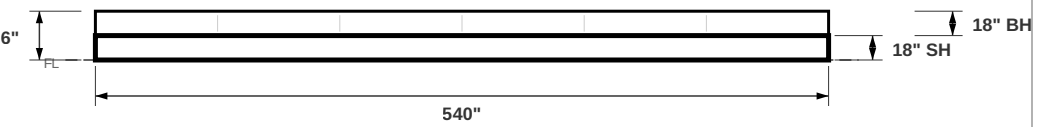

EMPIRE WORKROOM

CUSTOM UPHOLSTERY & FABRICATION
5124 Frolich Ln, Hyattsville, MD 20781
(703) 213-6484 | workroom@empirebox.store

ITEM:	FABRIC
TYPE:	STRAIGHT
DIMENSIONS:	540" W × 20" D × 18" SH × 18" BH
CUSHIONS:	23 @ 24" each
BACK STYLE:	CHANNELED BACK
QUOTE:	EST-2026-075
DATE:	03/30/2026
DRAWN BY:	MAX AI / Empire Workroom

SCALE REFERENCE

PLAN VIEW

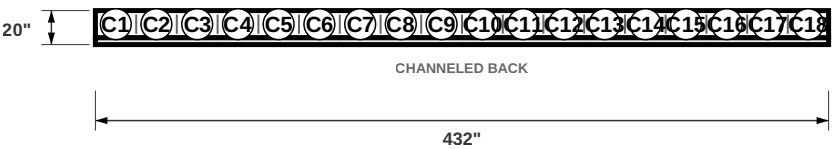

ISOMETRIC VIEW

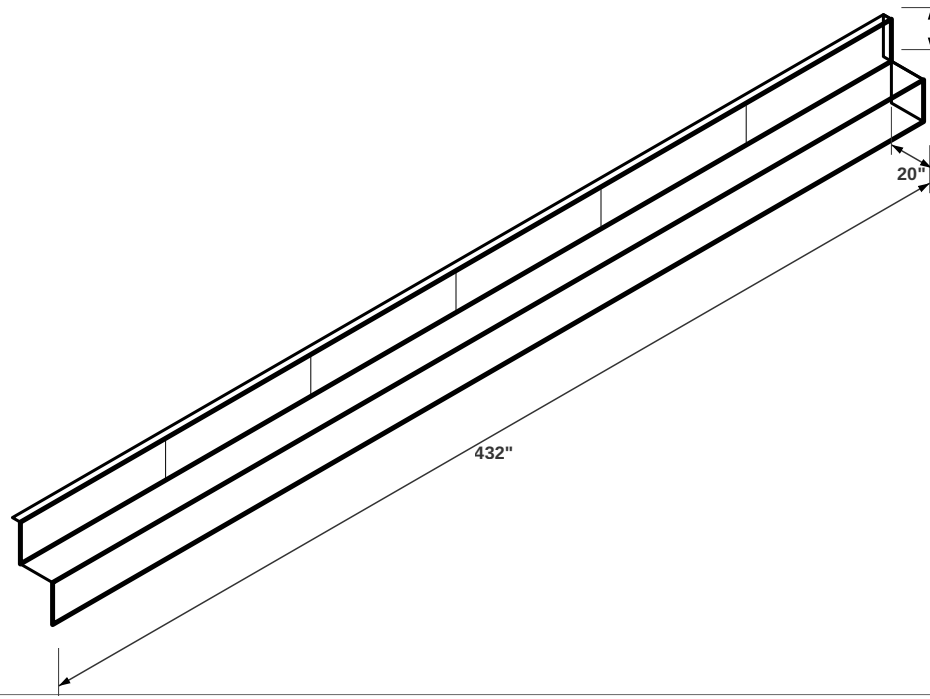

FRONT ELEVATION

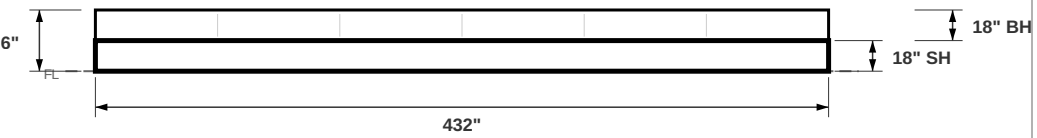

EMPIRE WORKROOM

CUSTOM UPHOLSTERY & FABRICATION
5124 Frolich Ln, Hyattsville, MD 20781
(703) 213-6484 | workroom@empirebox.store

ITEM:	FABRIC
TYPE:	STRAIGHT
DIMENSIONS:	432" W × 20" D × 18" SH × 18" BH
CUSHIONS:	18 @ 24" each
BACK STYLE:	CHANNELED BACK
QUOTE:	EST-2026-075
DATE:	03/30/2026
DRAWN BY:	MAX AI / Empire Workroom

SCALE REFERENCE

PLAN VIEW

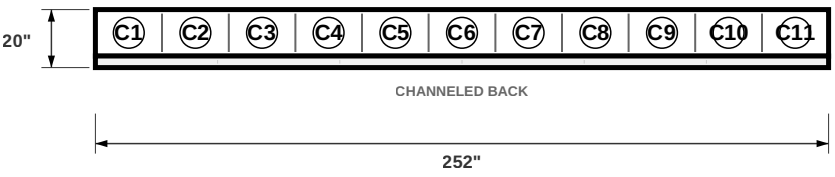

ISOMETRIC VIEW

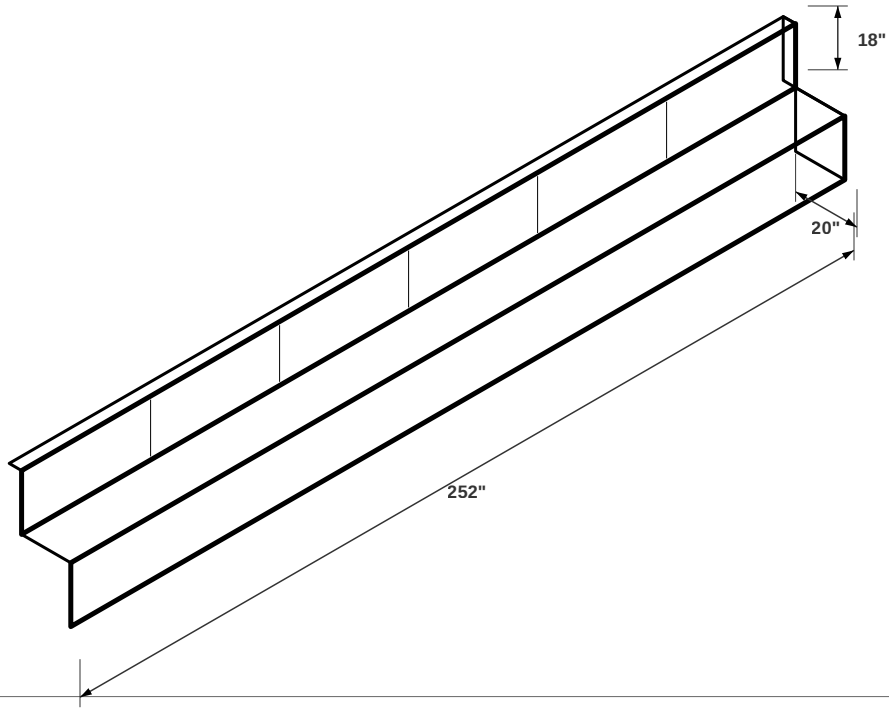

FRONT ELEVATION

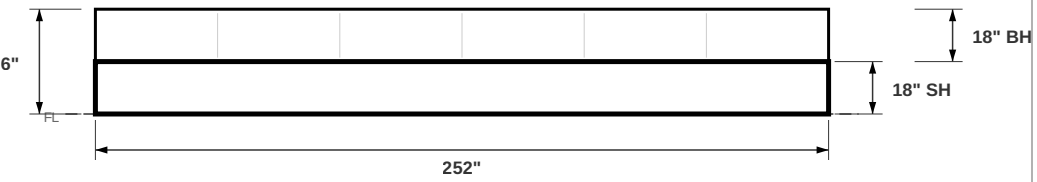

EMPIRE WORKROOM

CUSTOM UPHOLSTERY & FABRICATION
5124 Frolich Ln, Hyattsville, MD 20781
(703) 213-6484 | workroom@empirebox.store

ITEM:	STRAIGHT BENCH
TYPE:	STRAIGHT
DIMENSIONS:	252" W × 20" D × 18" SH × 18" BH
CUSHIONS:	11 @ 24" each
BACK STYLE:	CHANNELED BACK
QUOTE:	EST-2026-075
DATE:	03/30/2026
DRAWN BY:	MAX AI / Empire Workroom

SCALE REFERENCE

PLAN VIEW

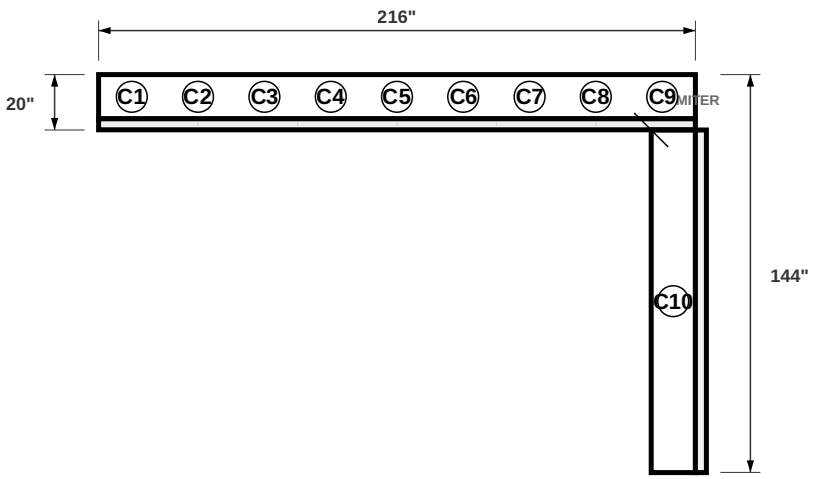

ISOMETRIC VIEW

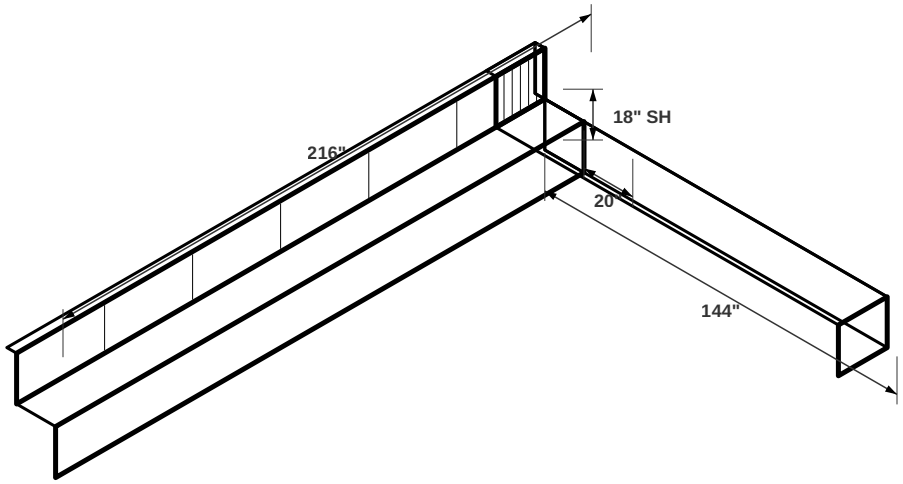

FRONT ELEVATION

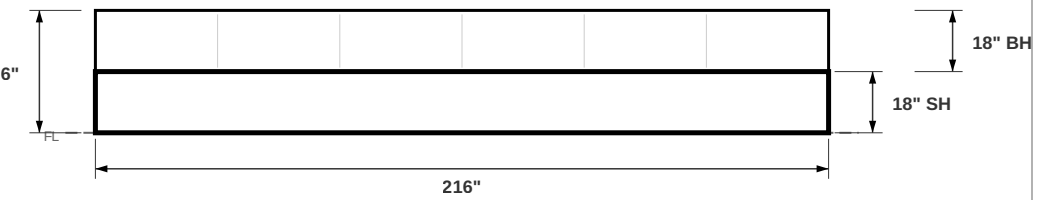

EMPIRE WORKROOM

CUSTOM UPHOLSTERY & FABRICATION
5124 Frolich Ln, Hyattsville, MD 20781
(703) 213-6484 | workroom@empirebox.store

ITEM:	L-SHAPED BENCH
TYPE:	L SHAPE
DIMENSIONS:	216" L × 144" S × 20" D × 18" SH × 18" BH
CUSHIONS:	9 @ 24" each
BACK STYLE:	CHANNELED BACK
QUOTE:	EST-2026-075
DATE:	03/30/2026
DRAWN BY:	MAX AI / Empire Workroom

SCALE REFERENCE

PLAN VIEW

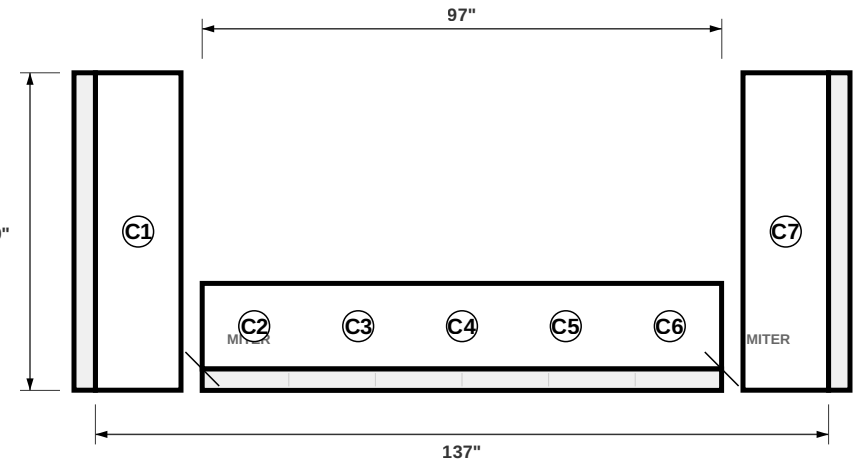

ISOMETRIC VIEW

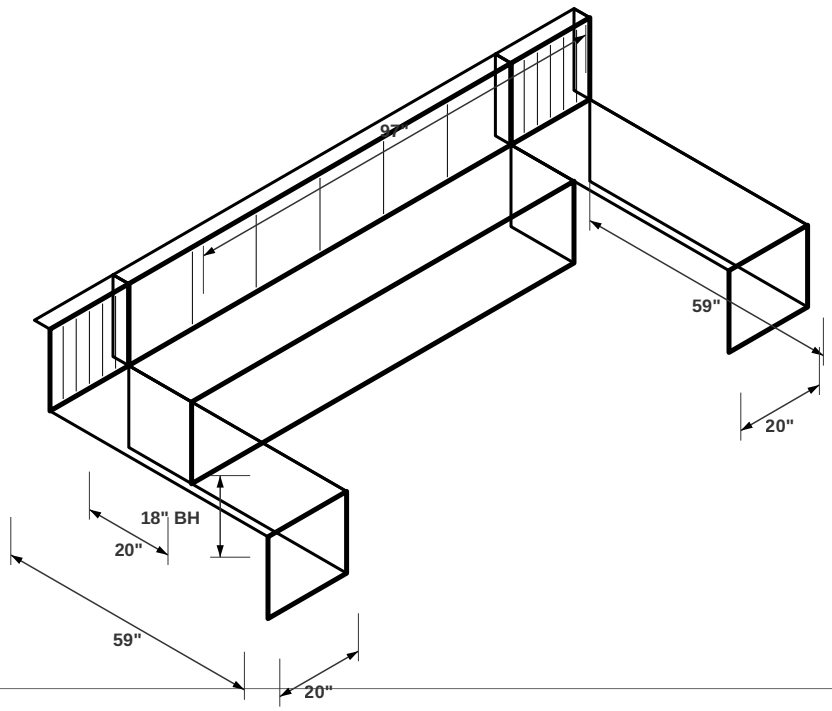

FRONT ELEVATION

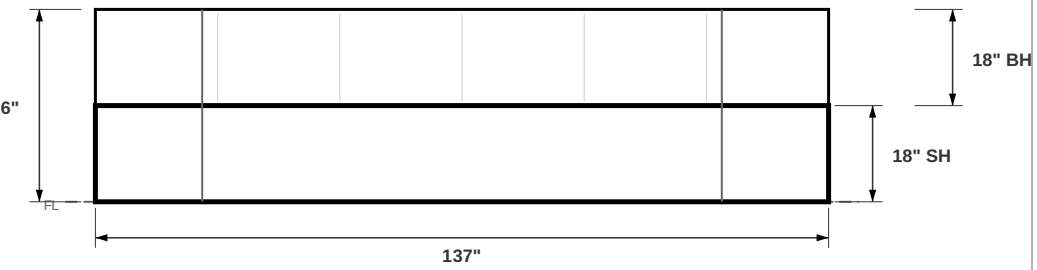

EMPIRE WORKROOM

CUSTOM UPHOLSTERY & FABRICATION

5124 Frolich Ln, Hyattsville, MD 20781

(703) 213-6484 | workroom@empirebox.store

ITEM:	U-SHAPED BOOTH ×2
TYPE:	U SHAPE
DIMENSIONS:	97" B × 59" S × 20" D × 20" SD × 18" SH × 18" BH
CUSHIONS:	7 @ 24" each
BACK STYLE:	CHANNELED BACK
QUOTE:	EST-2026-075
DATE:	03/30/2026
DRAWN BY:	MAX AI / Empire Workroom

SCALE REFERENCE

PLAN VIEW

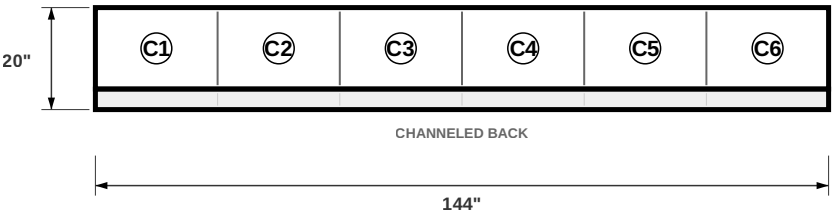

ISOMETRIC VIEW

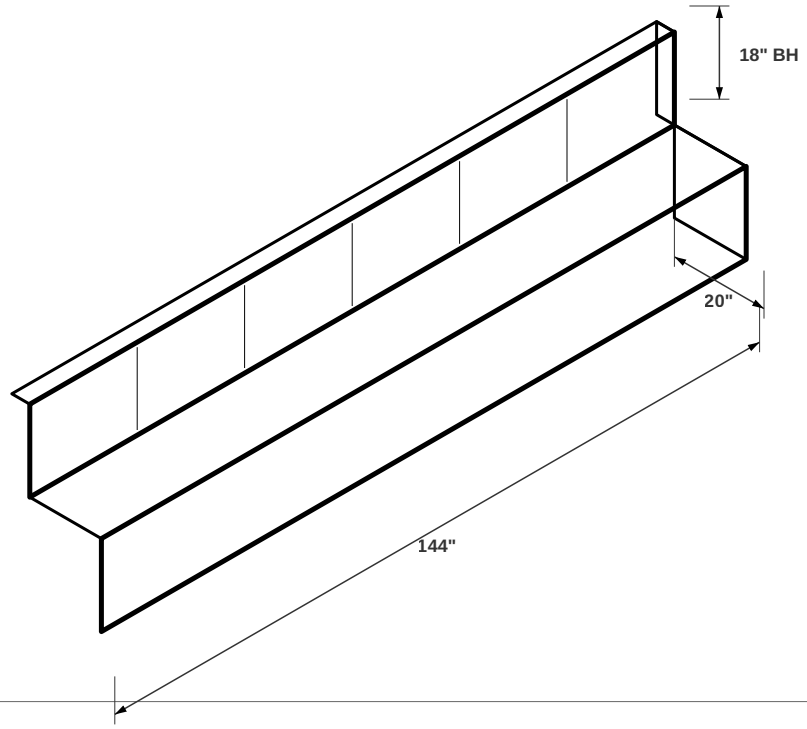

FRONT ELEVATION

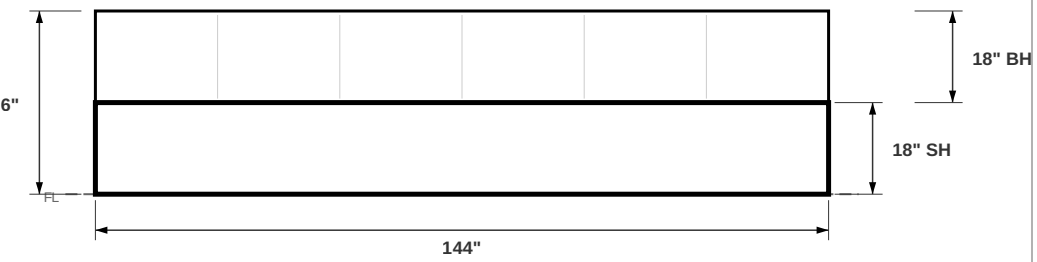

EMPIRE WORKROOM

CUSTOM UPHOLSTERY & FABRICATION
5124 Frolich Ln, Hyattsville, MD 20781
(703) 213-6484 | workroom@empirebox.store

ITEM:	FABRIC
TYPE:	STRAIGHT
DIMENSIONS:	144" W × 20" D × 18" SH × 18" BH
CUSHIONS:	6 @ 24" each
BACK STYLE:	CHANNELED BACK
QUOTE:	EST-2026-075
DATE:	03/30/2026
DRAWN BY:	MAX AI / Empire Workroom

SCALE REFERENCE

PLAN VIEW

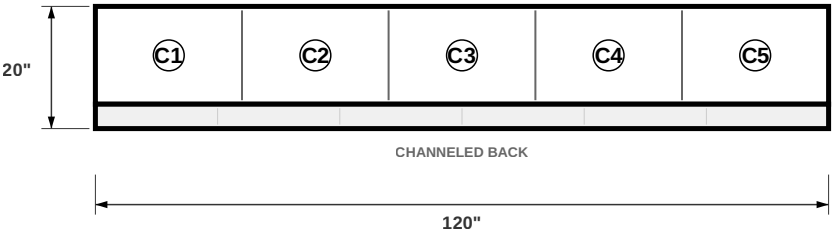

ISOMETRIC VIEW

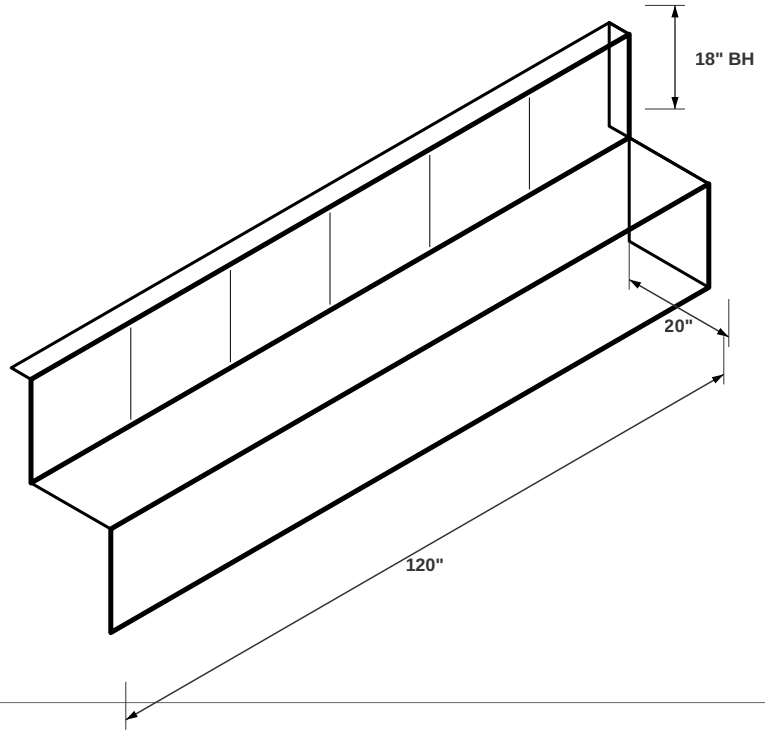

FRONT ELEVATION

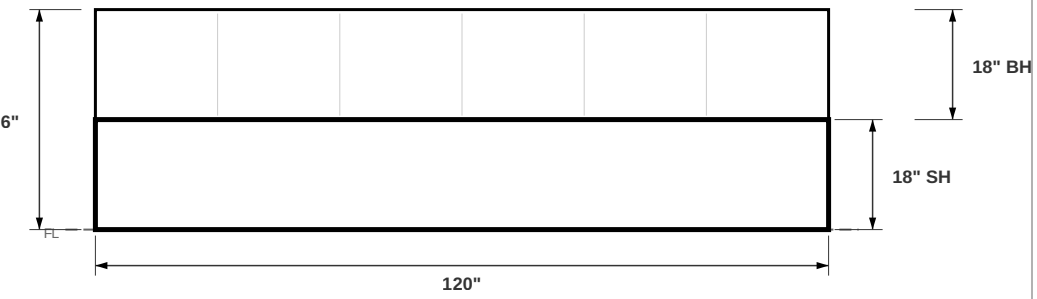

EMPIRE WORKROOM

CUSTOM UPHOLSTERY & FABRICATION

5124 Frolich Ln, Hyattsville, MD 20781

(703) 213-6484 | workroom@empirebox.store

ITEM:	FABRIC
TYPE:	STRAIGHT
DIMENSIONS:	120" W × 20" D × 18" SH × 18" BH
CUSHIONS:	5 @ 24" each
BACK STYLE:	CHANNELED BACK
QUOTE:	EST-2026-075
DATE:	03/30/2026
DRAWN BY:	MAX AI / Empire Workroom

SCALE REFERENCE

PLAN VIEW

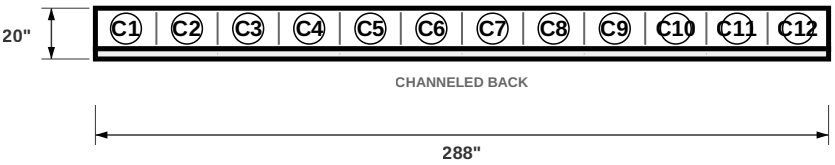

ISOMETRIC VIEW

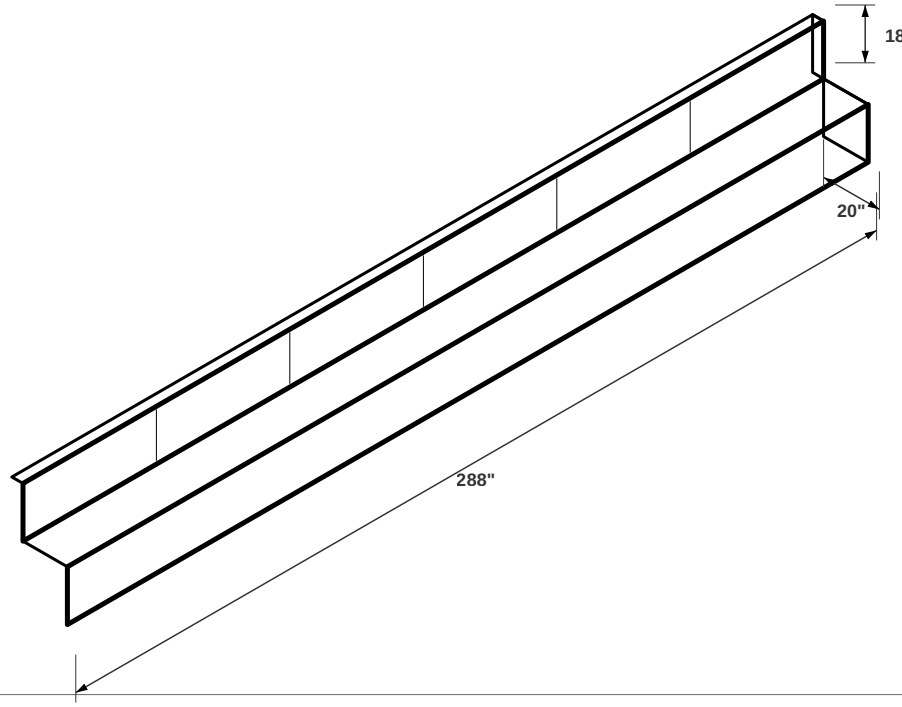

FRONT ELEVATION

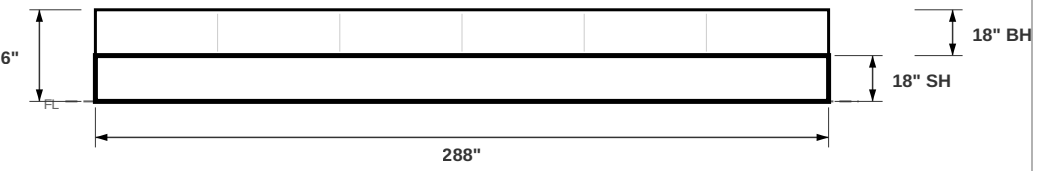

EMPIRE WORKROOM

CUSTOM UPHOLSTERY & FABRICATION
5124 Frolich Ln, Hyattsville, MD 20781
(703) 213-6484 | workroom@empirebox.store

ITEM:	UPSTAIRS DINING
TYPE:	STRAIGHT
DIMENSIONS:	288" W × 20" D × 18" SH × 18" BH
CUSHIONS:	12 @ 24" each
BACK STYLE:	CHANNELED BACK
QUOTE:	EST-2026-075
DATE:	03/30/2026
DRAWN BY:	MAX AI / Empire Workroom

SCALE REFERENCE

PLAN VIEW

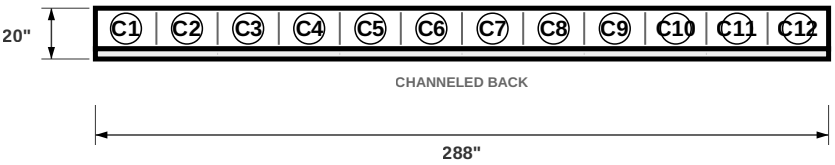

ISOMETRIC VIEW

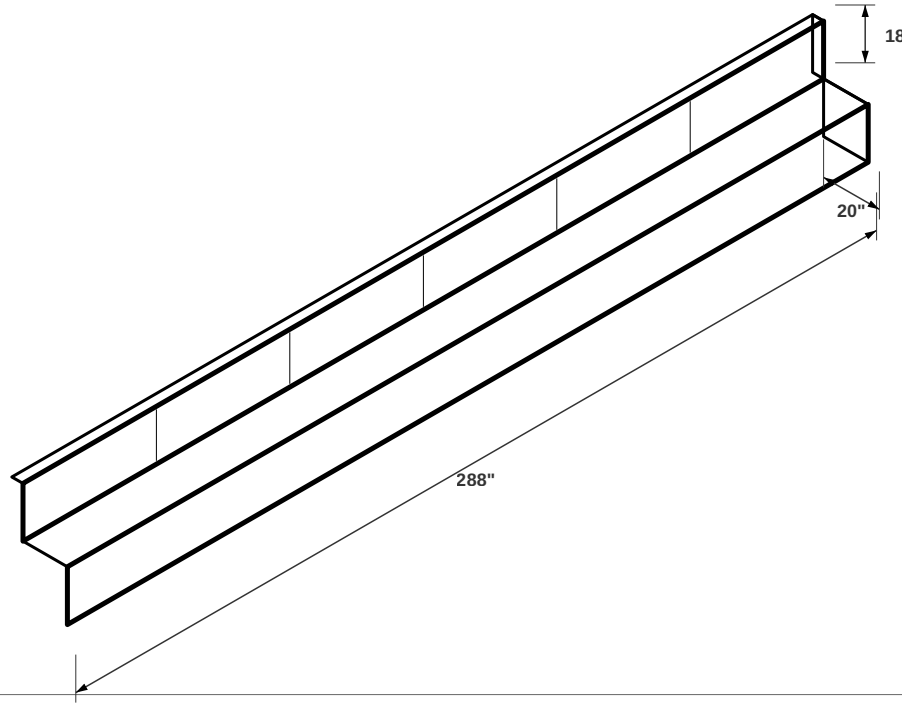

FRONT ELEVATION

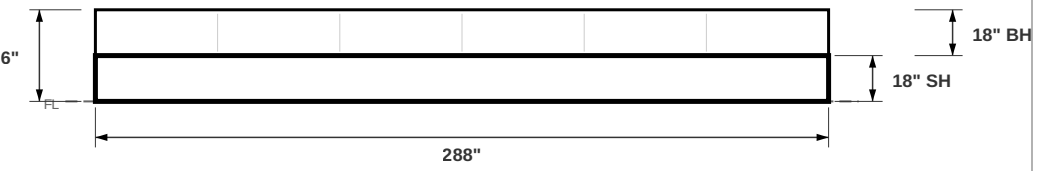

EMPIRE WORKROOM

CUSTOM UPHOLSTERY & FABRICATION
5124 Frolich Ln, Hyattsville, MD 20781
(703) 213-6484 | workroom@empirebox.store

ITEM:	FABRIC
TYPE:	STRAIGHT
DIMENSIONS:	288" W × 20" D × 18" SH × 18" BH
CUSHIONS:	12 @ 24" each
BACK STYLE:	CHANNELED BACK
QUOTE:	EST-2026-075
DATE:	03/30/2026
DRAWN BY:	MAX AI / Empire Workroom

SCALE REFERENCE

PLAN VIEW

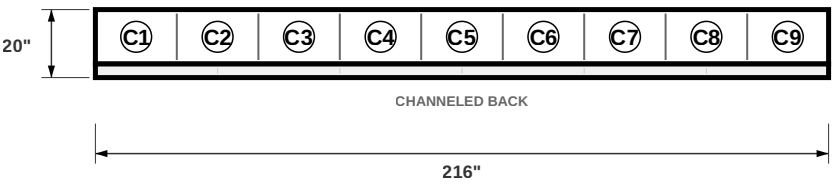

ISOMETRIC VIEW

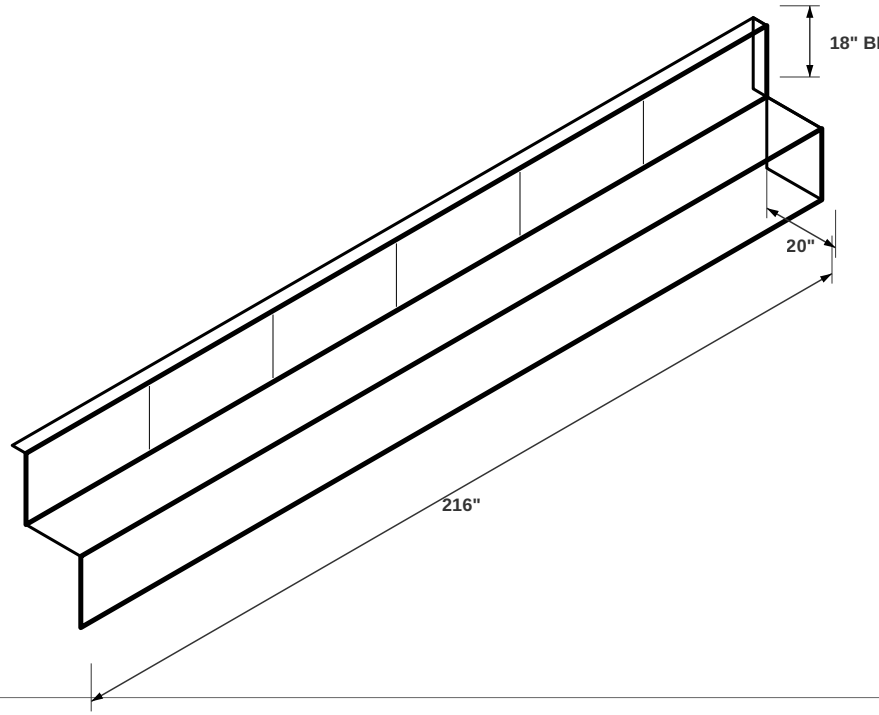

FRONT ELEVATION

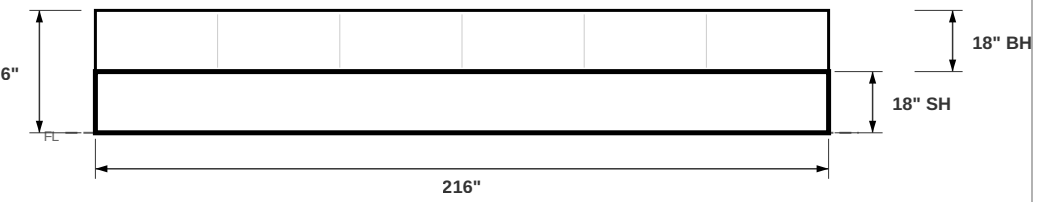

EMPIRE WORKROOM

CUSTOM UPHOLSTERY & FABRICATION

5124 Frolich Ln, Hyattsville, MD 20781

(703) 213-6484 | workroom@empirebox.store

ITEM:	FABRIC
TYPE:	STRAIGHT
DIMENSIONS:	216" W × 20" D × 18" SH × 18" BH
CUSHIONS:	9 @ 24" each
BACK STYLE:	CHANNELED BACK
QUOTE:	EST-2026-075
DATE:	03/30/2026
DRAWN BY:	MAX AI / Empire Workroom

SCALE REFERENCE

PLAN VIEW

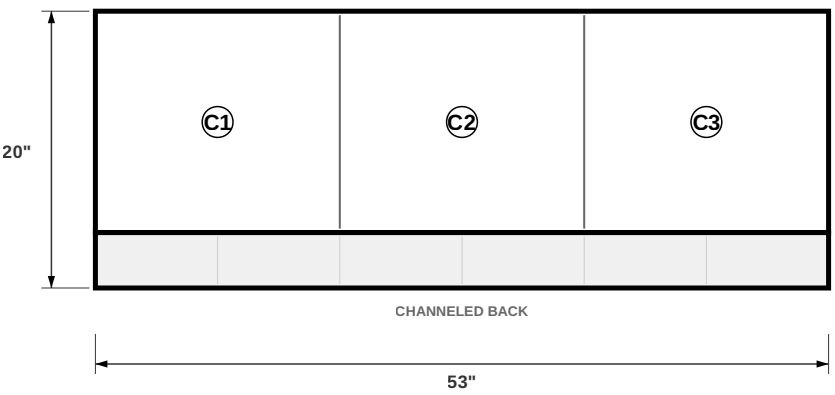

ISOMETRIC VIEW

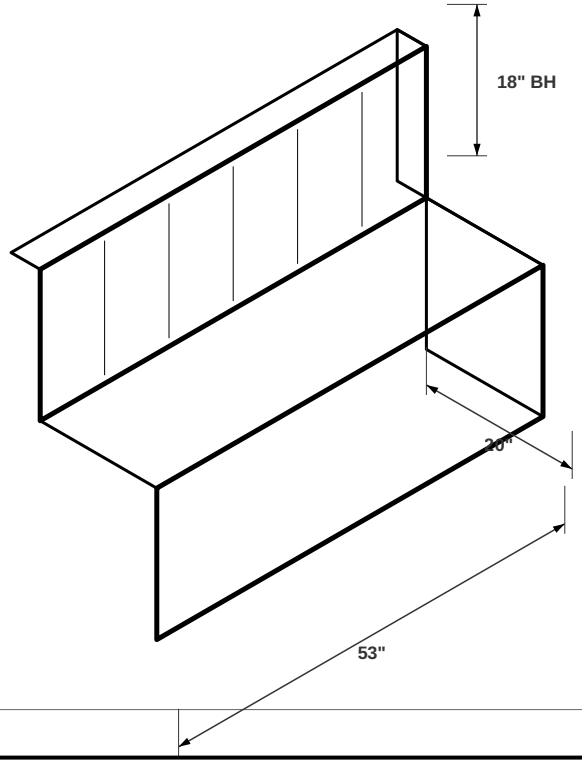

FRONT ELEVATION

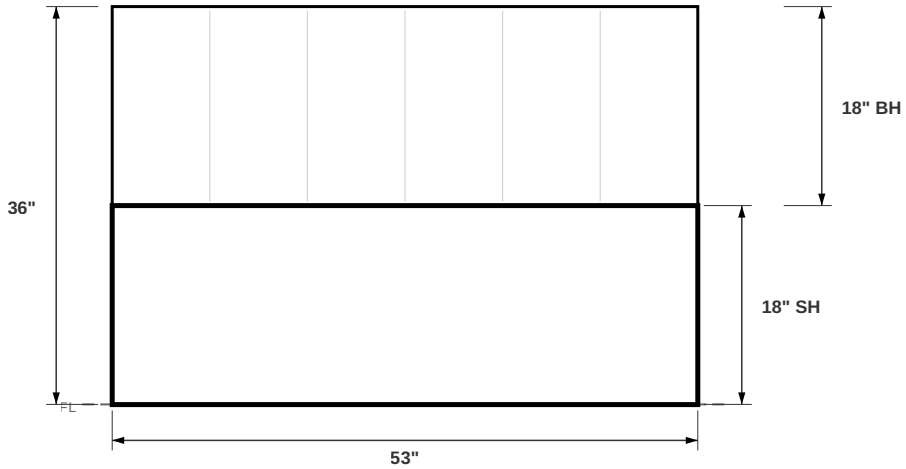

EMPIRE WORKROOM

CUSTOM UPHOLSTERY & FABRICATION

5124 Frolich Ln, Hyattsville, MD 20781
(703) 213-6484 | workroom@empirebox.store

ITEM:	UPSTAIRS DINING BACK ×2
TYPE:	STRAIGHT
DIMENSIONS:	53" W × 20" D × 18" SH × 18" BH
CUSHIONS:	3 @ 24" each
BACK STYLE:	CHANNELED BACK
QUOTE:	EST-2026-075
DATE:	03/30/2026
DRAWN BY:	MAX AI / Empire Workroom

SCALE REFERENCE

PLAN VIEW

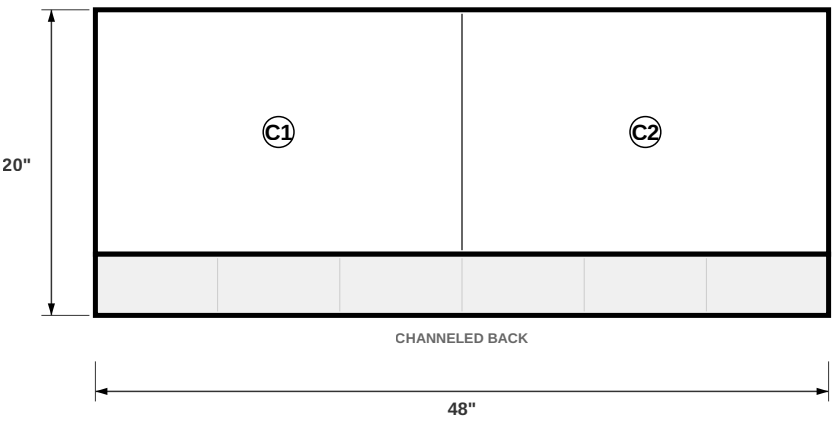

ISOMETRIC VIEW

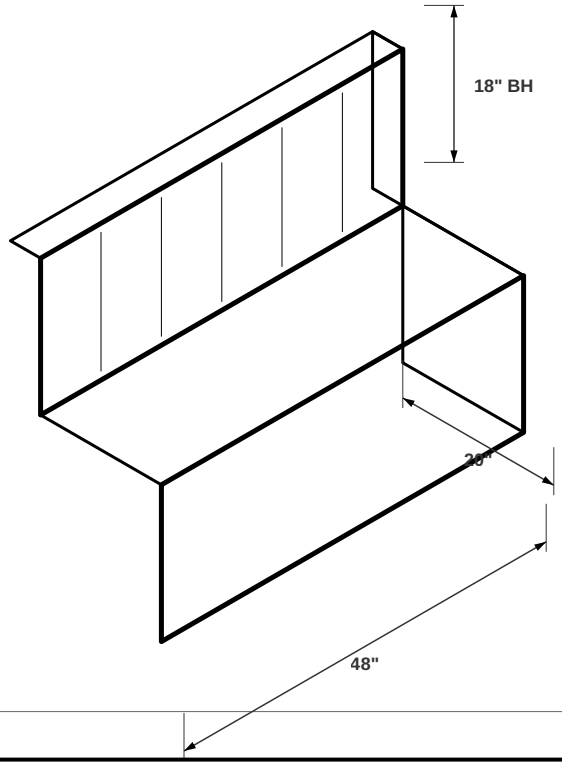

FRONT ELEVATION

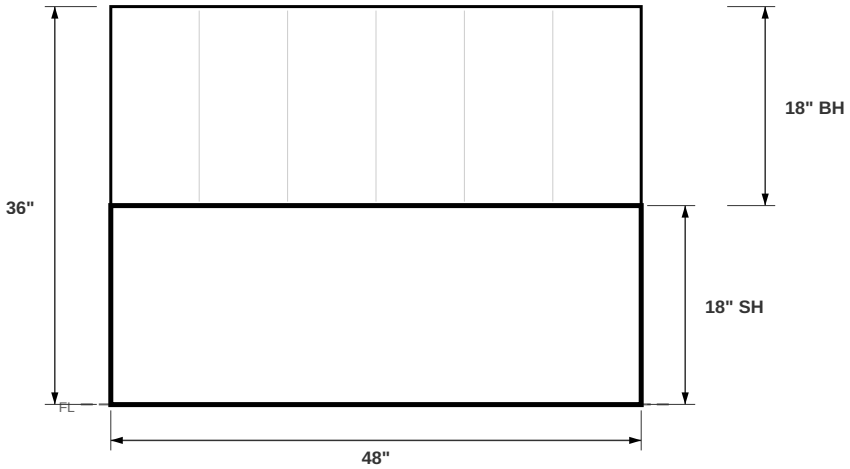

EMPIRE WORKROOM

CUSTOM UPHOLSTERY & FABRICATION

5124 Frolich Ln, Hyattsville, MD 20781

(703) 213-6484 | workroom@empirebox.store

ITEM:	FABRIC
TYPE:	STRAIGHT
DIMENSIONS:	48" W × 20" D × 18" SH × 18" BH
CUSHIONS:	2 @ 24" each
BACK STYLE:	CHANNELED BACK
QUOTE:	EST-2026-075
DATE:	03/30/2026
DRAWN BY:	MAX AI / Empire Workroom

SCALE REFERENCE

PLAN VIEW

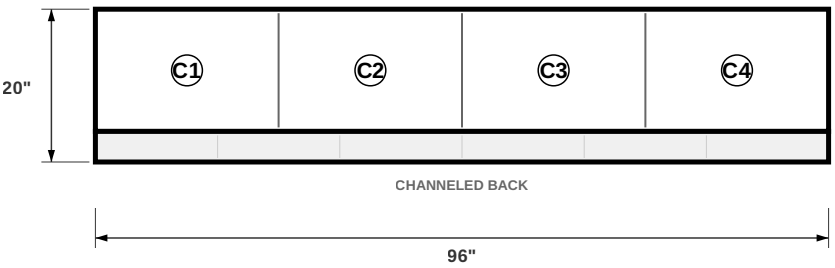

ISOMETRIC VIEW

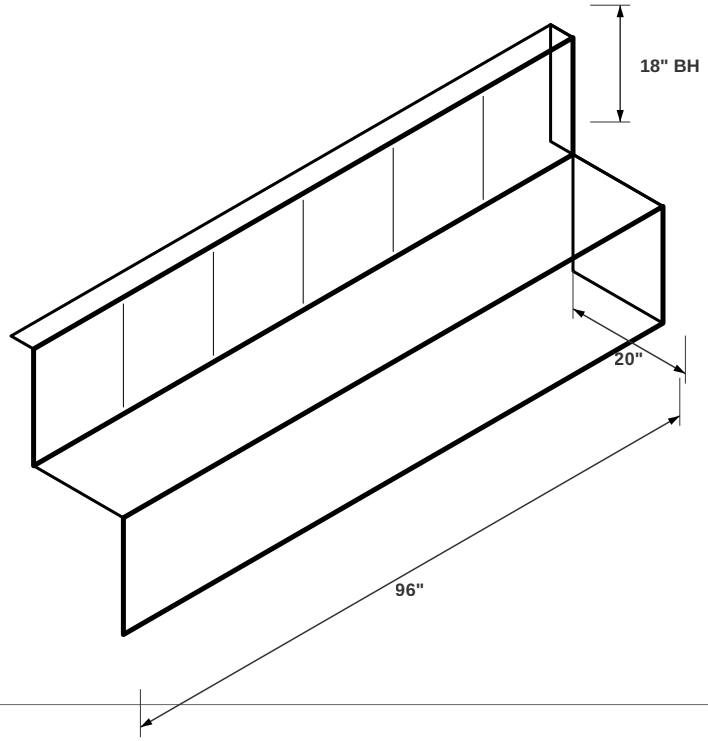

FRONT ELEVATION

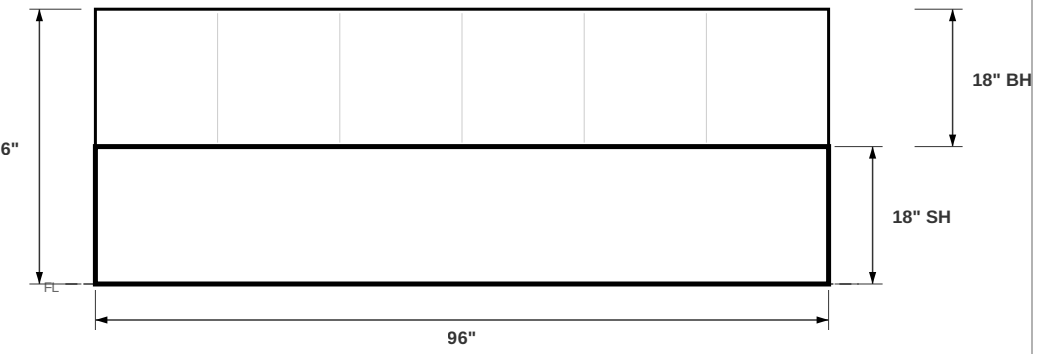

EMPIRE WORKROOM

CUSTOM UPHOLSTERY & FABRICATION
5124 Frolich Ln, Hyattsville, MD 20781
(703) 213-6484 | workroom@empirebox.store

ITEM:	FABRIC
TYPE:	STRAIGHT
DIMENSIONS:	96" W × 20" D × 18" SH × 18" BH
CUSHIONS:	4 @ 24" each
BACK STYLE:	CHANNELED BACK
QUOTE:	EST-2026-075
DATE:	03/30/2026
DRAWN BY:	MAX AI / Empire Workroom

SCALE REFERENCE

PLAN VIEW

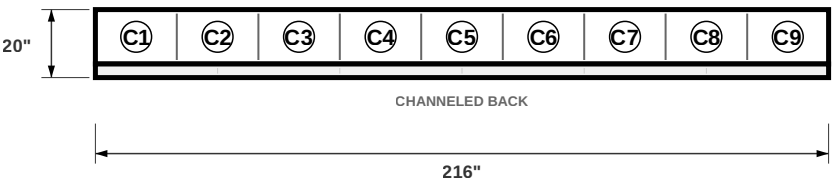

ISOMETRIC VIEW

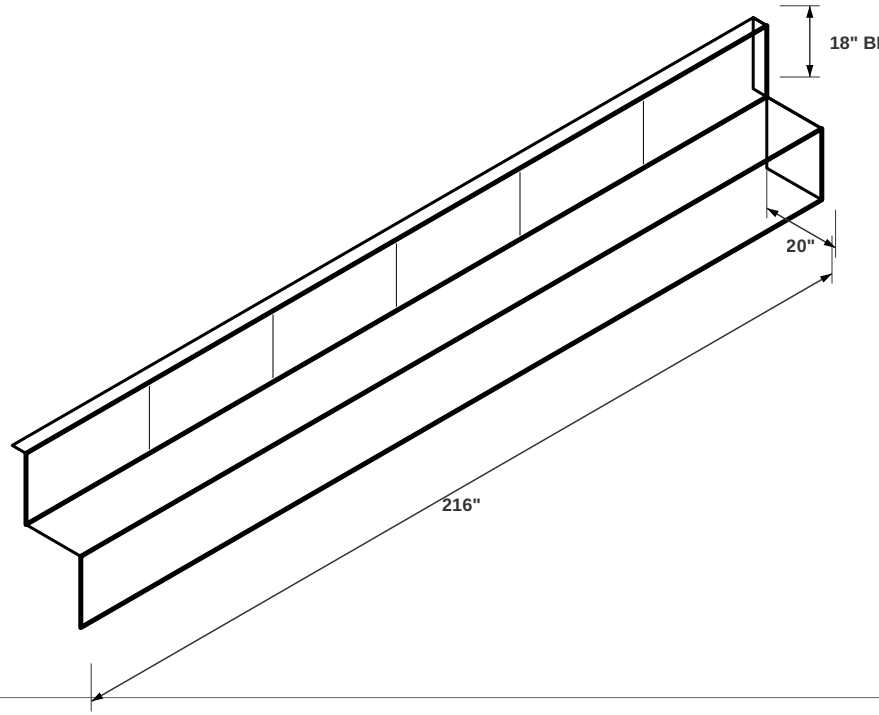

FRONT ELEVATION

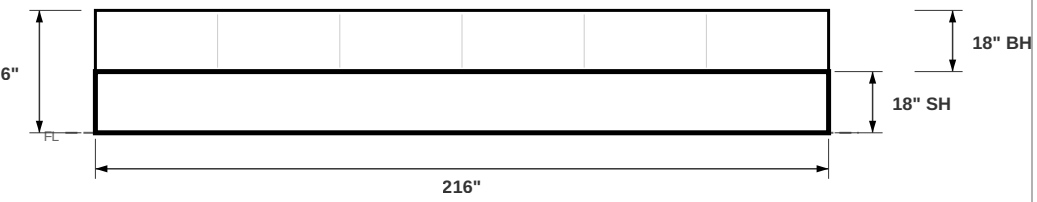

EMPIRE WORKROOM

CUSTOM UPHOLSTERY & FABRICATION

5124 Frolich Ln, Hyattsville, MD 20781

(703) 213-6484 | workroom@empirebox.store

ITEM:	PATIO 1
TYPE:	STRAIGHT
DIMENSIONS:	216" W × 20" D × 18" SH × 18" BH
CUSHIONS:	9 @ 24" each
BACK STYLE:	CHANNELED BACK
QUOTE:	EST-2026-075
DATE:	03/30/2026
DRAWN BY:	MAX AI / Empire Workroom

SCALE REFERENCE

PLAN VIEW

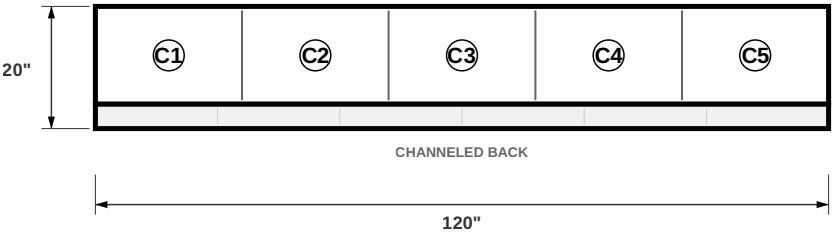

ISOMETRIC VIEW

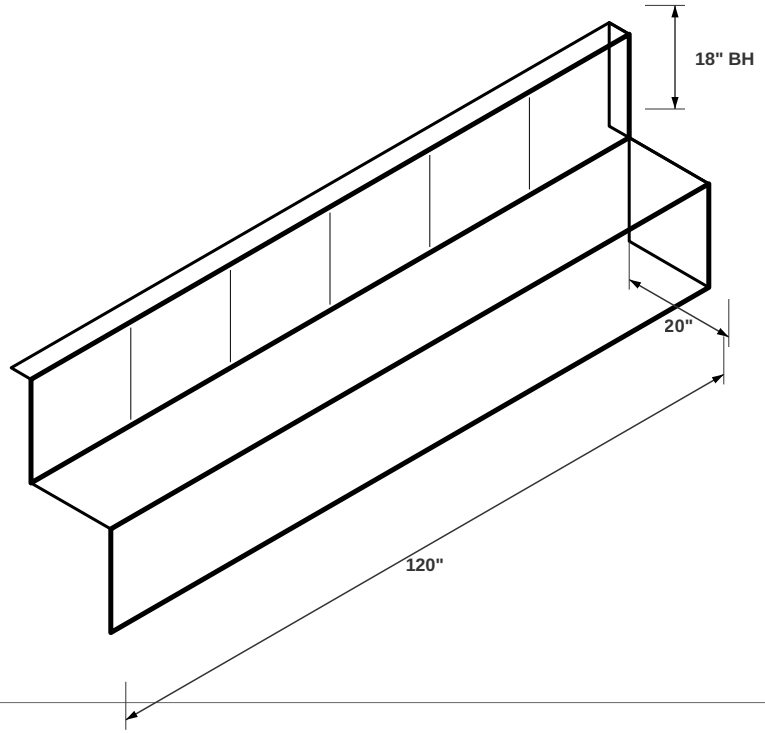

FRONT ELEVATION

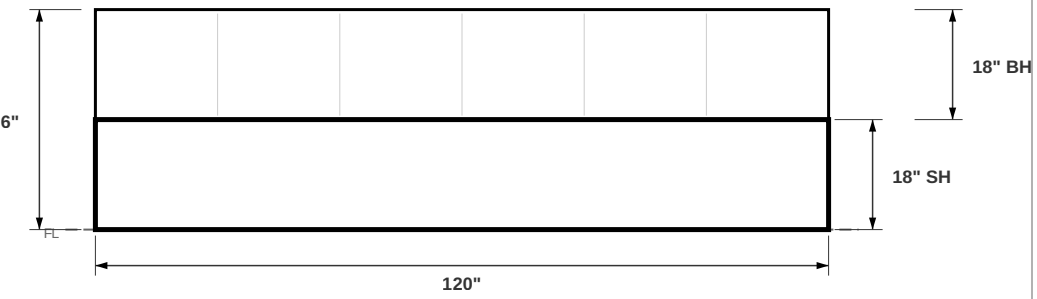

EMPIRE WORKROOM

CUSTOM UPHOLSTERY & FABRICATION

5124 Frolich Ln, Hyattsville, MD 20781

(703) 213-6484 | workroom@empirebox.store

ITEM:	FABRIC
TYPE:	STRAIGHT
DIMENSIONS:	120" W × 20" D × 18" SH × 18" BH
CUSHIONS:	5 @ 24" each
BACK STYLE:	CHANNELED BACK
QUOTE:	EST-2026-075
DATE:	03/30/2026
DRAWN BY:	MAX AI / Empire Workroom

SCALE REFERENCE

PLAN VIEW

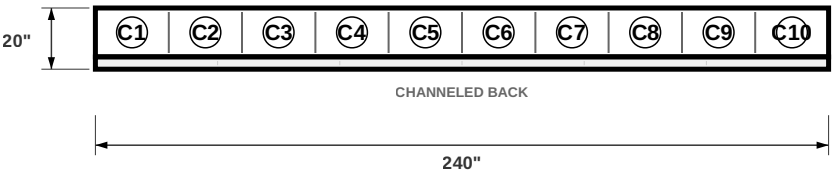

ISOMETRIC VIEW

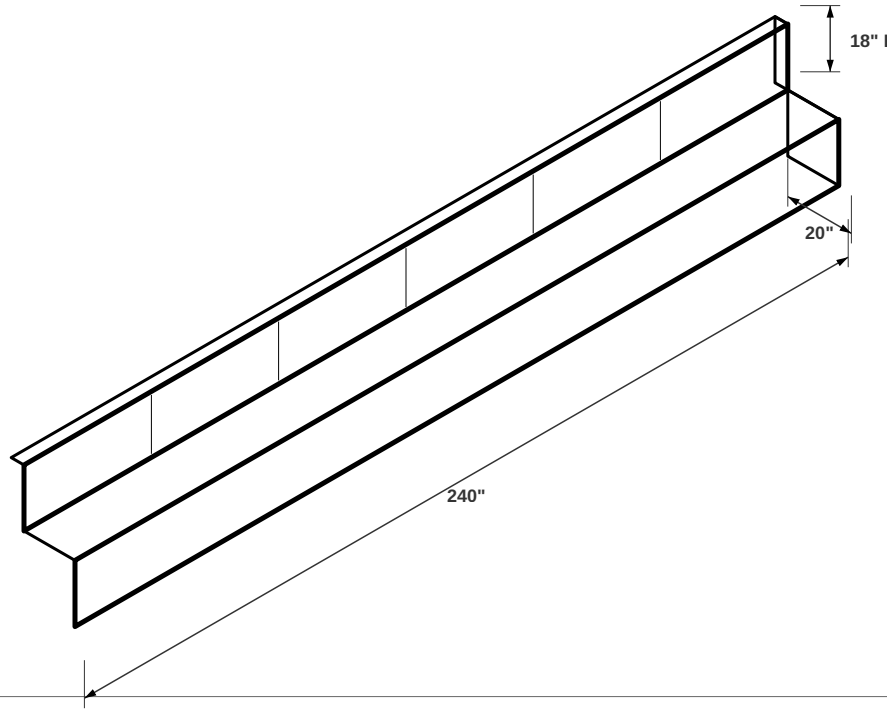

FRONT ELEVATION

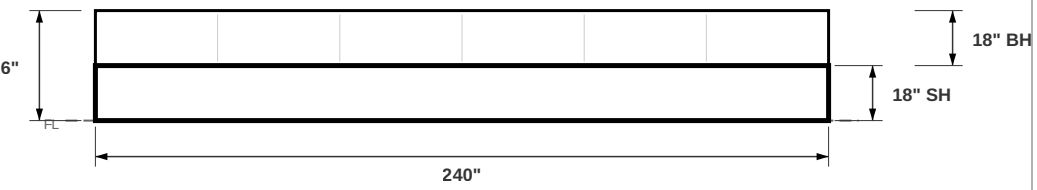

EMPIRE WORKROOM

CUSTOM UPHOLSTERY & FABRICATION
5124 Frolich Ln, Hyattsville, MD 20781
(703) 213-6484 | workroom@empirebox.store

ITEM:	FABRIC
TYPE:	STRAIGHT
DIMENSIONS:	240" W × 20" D × 18" SH × 18" BH
CUSHIONS:	10 @ 24" each
BACK STYLE:	CHANNELED BACK
QUOTE:	EST-2026-075
DATE:	03/30/2026
DRAWN BY:	MAX AI / Empire Workroom

SCALE REFERENCE

PLAN VIEW

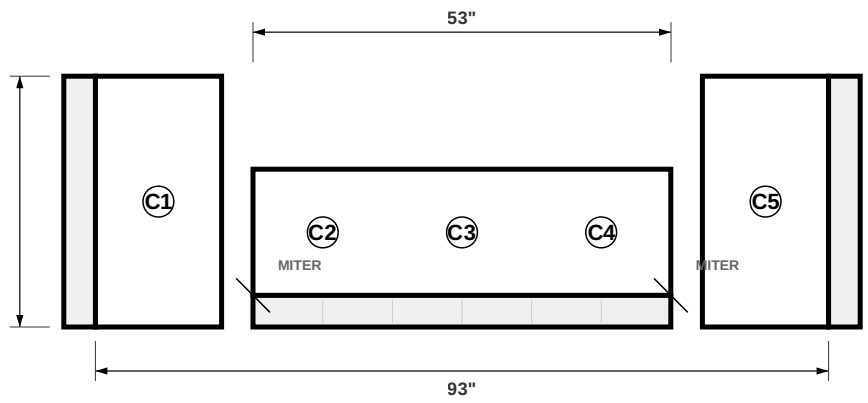

ISOMETRIC VIEW

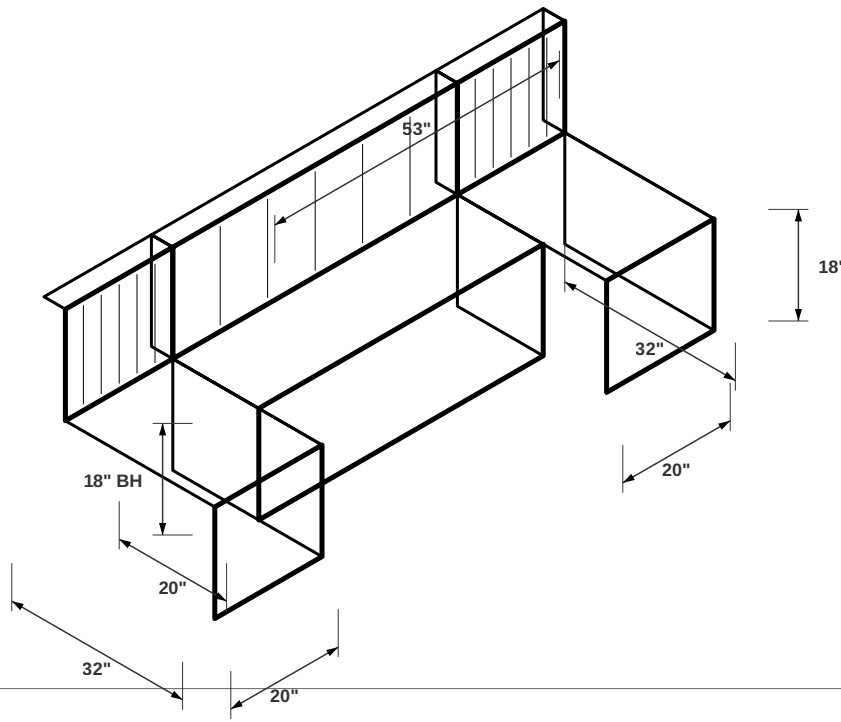

FRONT ELEVATION

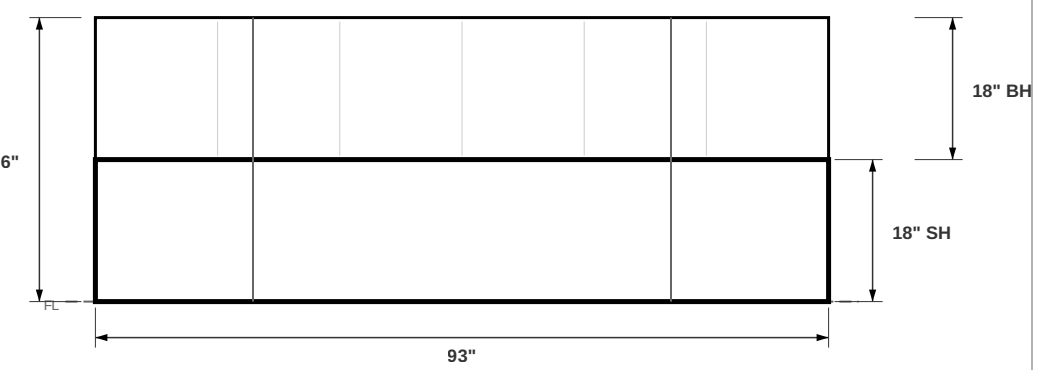

EMPIRE WORKROOM

CUSTOM UPHOLSTERY & FABRICATION

5124 Frolich Ln, Hyattsville, MD 20781

(703) 213-6484 | workroom@empirebox.store

ITEM:	PATIO 2 U-SHAPED BENCH
TYPE:	U SHAPE
DIMENSIONS:	53" B × 32" S × 20" D × 20" SD × 18" SH × 18" BH
CUSHIONS:	5 @ 24" each
BACK STYLE:	CHANNELED BACK
QUOTE:	EST-2026-075
DATE:	03/30/2026
DRAWN BY:	MAX AI / Empire Workroom

SCALE REFERENCE

PLAN VIEW

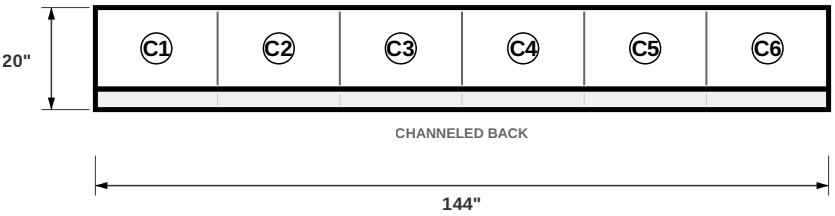

ISOMETRIC VIEW

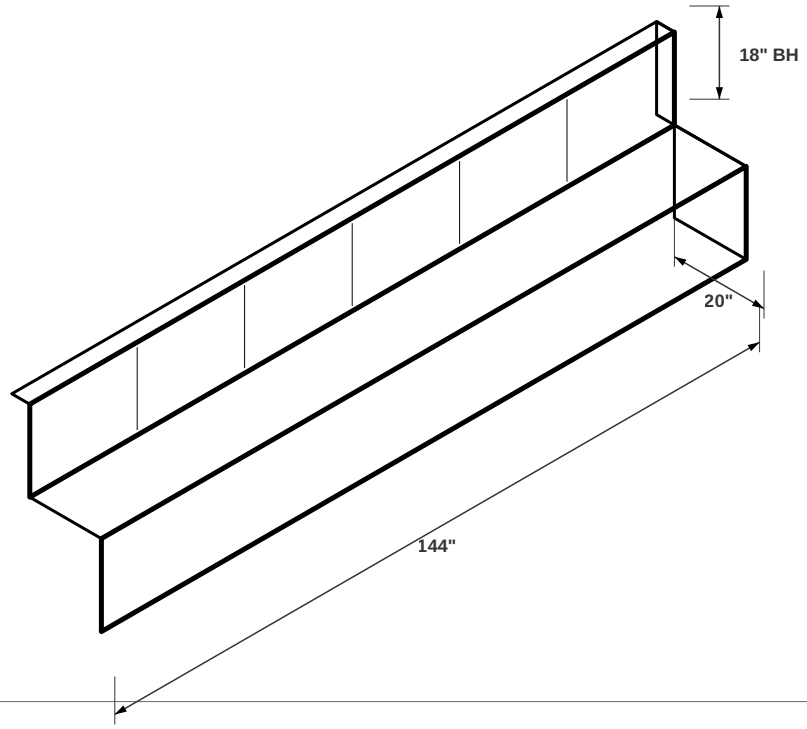

FRONT ELEVATION

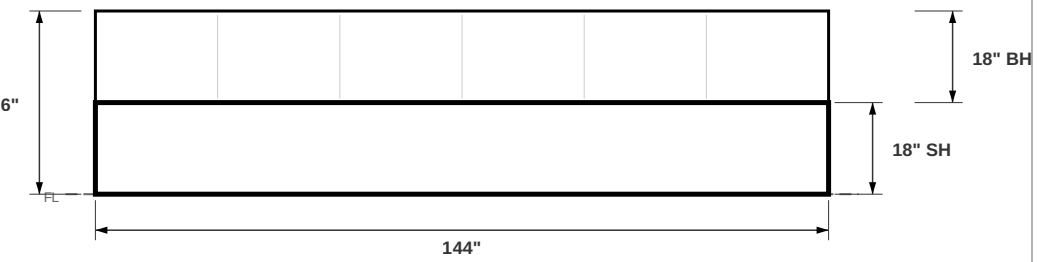

EMPIRE WORKROOM

CUSTOM UPHOLSTERY & FABRICATION
5124 Frolich Ln, Hyattsville, MD 20781
(703) 213-6484 | workroom@empirebox.store

ITEM:	FABRIC
TYPE:	STRAIGHT
DIMENSIONS:	144" W × 20" D × 18" SH × 18" BH
CUSHIONS:	6 @ 24" each
BACK STYLE:	CHANNELED BACK
QUOTE:	EST-2026-075
DATE:	03/30/2026
DRAWN BY:	MAX AI / Empire Workroom

SCALE REFERENCE

PLAN VIEW

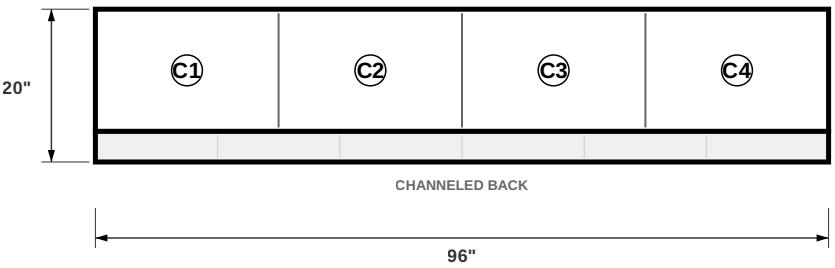

ISOMETRIC VIEW

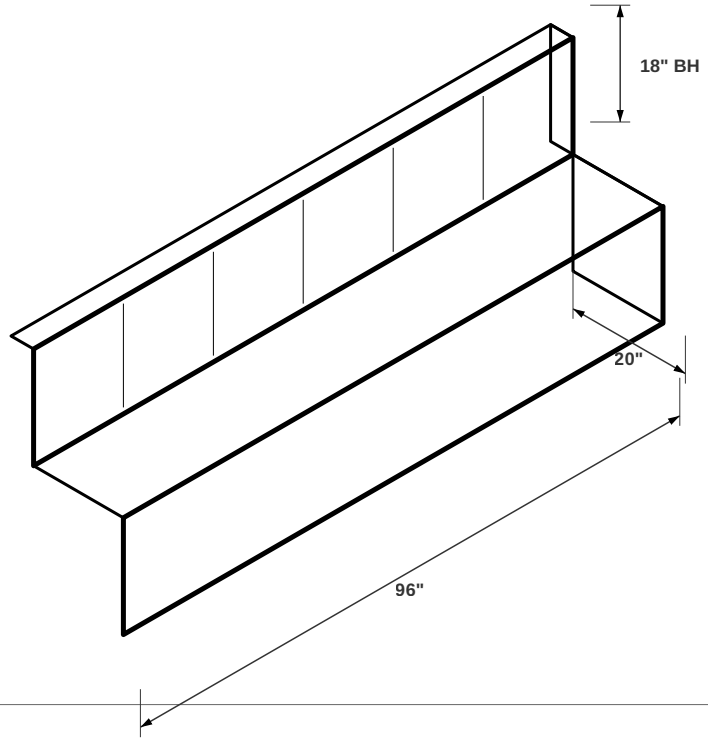

FRONT ELEVATION

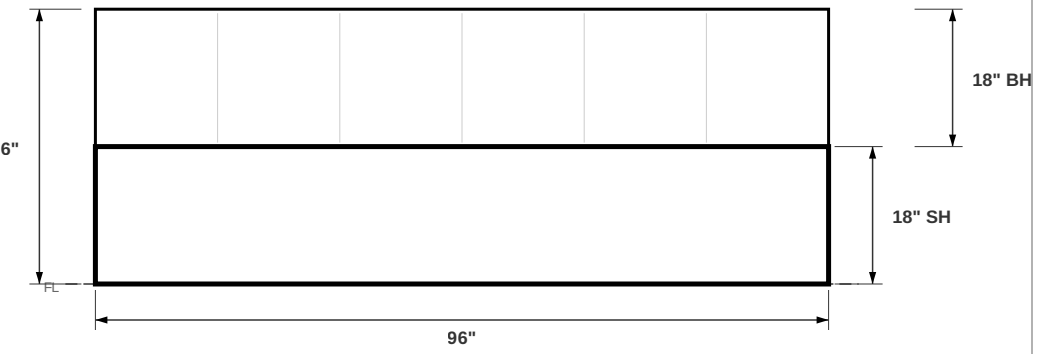

EMPIRE WORKROOM

CUSTOM UPHOLSTERY & FABRICATION
5124 Frolich Ln, Hyattsville, MD 20781
(703) 213-6484 | workroom@empirebox.store

ITEM:	FABRIC
TYPE:	STRAIGHT
DIMENSIONS:	96" W × 20" D × 18" SH × 18" BH
CUSHIONS:	4 @ 24" each
BACK STYLE:	CHANNELED BACK
QUOTE:	EST-2026-075
DATE:	03/30/2026
DRAWN BY:	MAX AI / Empire Workroom

SCALE REFERENCE

PLAN VIEW

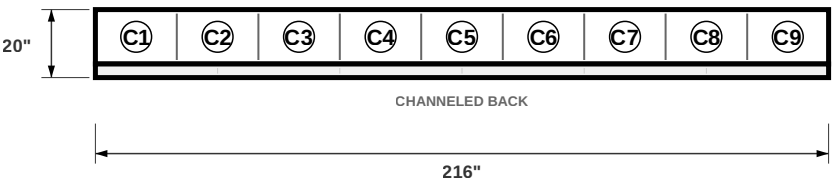

ISOMETRIC VIEW

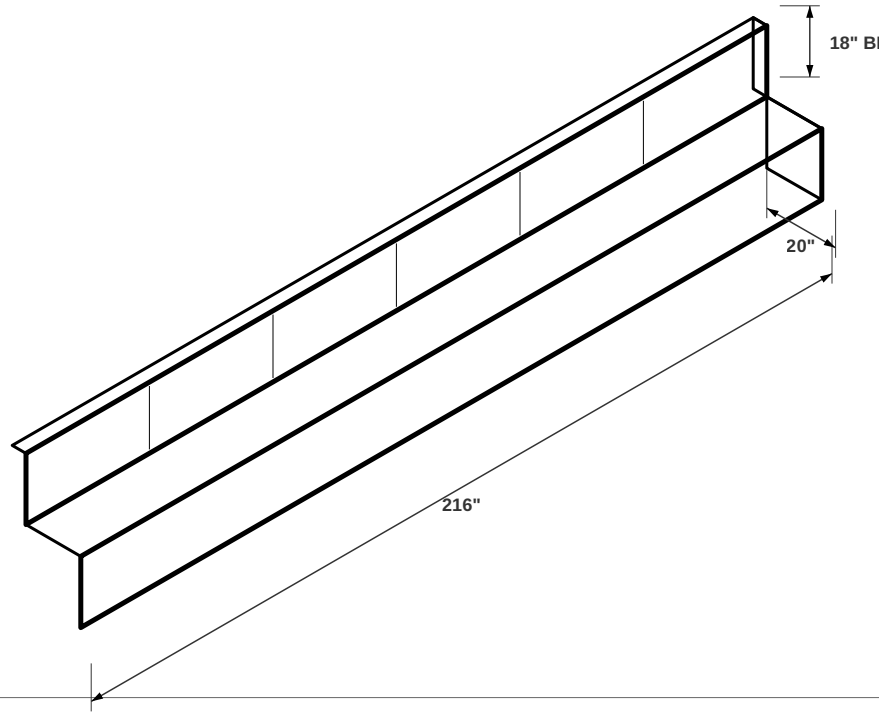

FRONT ELEVATION

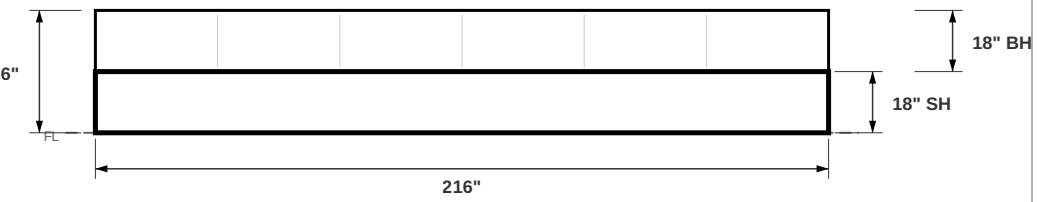

EMPIRE WORKROOM

CUSTOM UPHOLSTERY & FABRICATION

5124 Frolich Ln, Hyattsville, MD 20781

(703) 213-6484 | workroom@empirebox.store

ITEM:	PATIO 2 HIGH SOFA
TYPE:	STRAIGHT
DIMENSIONS:	216" W × 20" D × 18" SH × 18" BH
CUSHIONS:	9 @ 24" each
BACK STYLE:	CHANNELED BACK
QUOTE:	EST-2026-075
DATE:	03/30/2026
DRAWN BY:	MAX AI / Empire Workroom

SCALE REFERENCE