# Empire

Custom Window Treatments & Upholstery

**ESTIMATE**

**EST-2026-035**

Date: 2026-03-02

Valid until: 2026-04-01

PREPARED FOR

**Tony BAhamas**

PROJECT

**Living Room Drapery**

M **Professional Assessment**

Tony, your living room is a stunning canvas with a dramatic botanical mural and high-end eclectic style. Based on the bright south/west-facing light, I've recommended blackout lining for these ripplefold draperies to ensure privacy and light control. Reusing your existing brass rods complements the chandelier's aesthetic while keeping costs down. Let us know if you'd like fabric swatches or motorization options to elevate this further!

## Living Room

*Choose one of the following treatment options:*

| OPTION | TREATMENT | FABRIC & LINING | HARDWARE | EXTRAS | PRICE RANGE |
|---|---|---|---|---|---|
| ELEGANT ESSENTIAL | **grommet panels** | medium weight polyester blend — simple with retro geometric print<br>*standard privacy lining* | teak wood rod with silver grommets | — | **$500 – $1,000** |
| DESIGNER'S CHOICE | **layered treatment (sheer + drapery)** | linen blend for drapery, silk for sheer — geometric print drapery with solid sheer<br>*thermal blackout lining for drapery, none for sheer* | brushed nickel double rod | interlining for drapery | **$1,500 – $3,000** |
| ULTIMATE LUXURY | **full custom treatment** | silk velvet for drapery, designer print silk for valance — premium silk velvet drapery with designer print valance<br>*blackout interlining for drapery, none for valance* | custom hand-forged iron rod with crystal finials | motorization, custom silk sheer underlayer | **$5,000 – $10,000** |

### ELEGANT ESSENTIAL

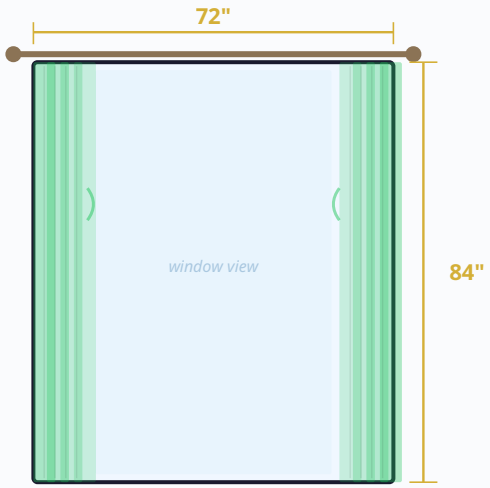


grommet panels

teak wood rod with silver grommets

**$500 – $1,000**

### DESIGNER'S CHOICE

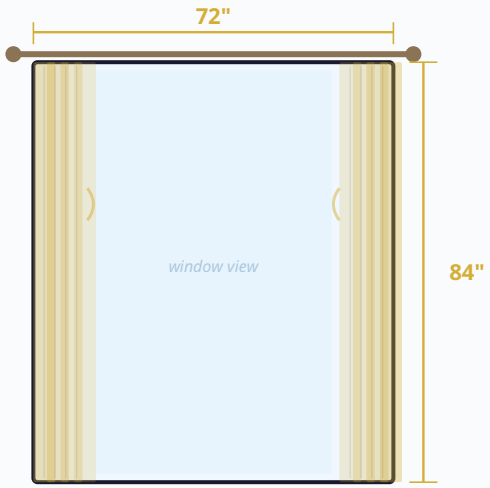


layered treatment (sheer + drapery)

brushed nickel double rod

**$1,500 – $3,000**

### ULTIMATE LUXURY

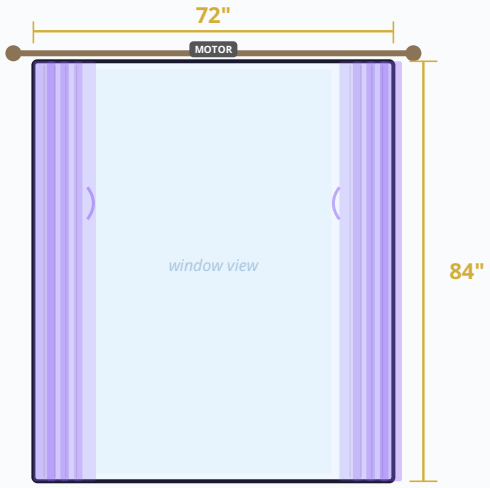


full custom treatment

custom hand-forged iron rod with crystal finials · Motorized

**$5,000 – $10,000**

**ELEGANT ESSENTIAL** · double hung (95%)

→ The grommet panels in a retro geometric print would hang elegantly from a warm teak rod, providing a subtle mid-century vibe. The fabric, a medium weight polyester blend, would drape smoothly, allowing soft light to filter through while maintaining privacy. The silver grommets would add a touch of modern contrast against the warm wood.

→ This option provides a budget-friendly yet stylish solution that aligns with the mid-century aesthetic, offering both functionality and visual appeal without overwhelming the space.

**DESIGNER'S CHOICE** · double hung (95%)

→ The layered treatment features a geometric print linen blend drapery with a solid silk sheer underneath. The sheer would allow a gentle diffusion of light, creating a soft glow in the room, while the drapery, with its thermal blackout lining, would provide privacy and insulation. The brushed nickel double rod would add a sleek, contemporary touch, complementing the room's transitional style.

→ This mid-range luxury option enhances the room's sophistication by adding depth and texture through layering. The combination of patterns and solids, along with the use of different fabrics, creates a rich, inviting atmosphere.

**ULTIMATE LUXURY** · double hung (95%)

→ This ultimate luxury treatment features silk velvet drapery in a soft grey, paired with a striking designer print silk valance. The drapery would hang with a luxurious, heavy drape, providing complete privacy and a rich texture. The valance, with its bold print, would add a focal point above the window. A custom silk sheer underlayer would diffuse light beautifully, creating a serene ambiance. The hand-forged iron rod with crystal finials would add an opulent touch, while motorization offers effortless operation.

→ This premium option transforms the window area into a statement piece, combining the finest materials and craftsmanship with modern convenience. The use of high-end fabrics and custom hardware creates a dramatic, luxurious impact, perfectly suited for a high-end residential setting.

*Treatment options range from* **$500 – $10,000**

## Dimensional Plan — Living Room

Site Photo

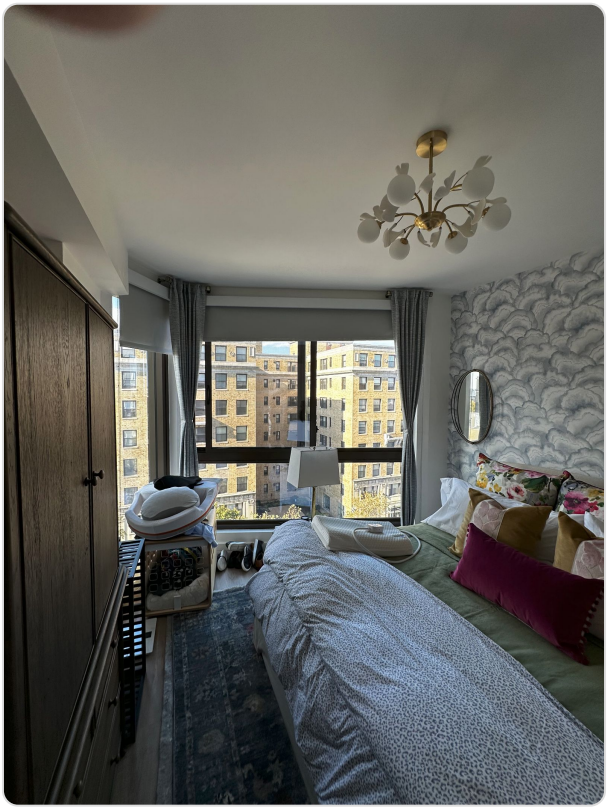

**Mounting:** Outside Mount mount · Rod width: 96" · Height: 64"
*Due to the depth of the window frame and the presence of existing curtains, an outside mount is recommended. The rod should be mounted 4 inches above the window to allow for proper clearance and aesthetic appeal.*

## Design Proposals — Living Room

Reference Photo

**Room:** bedroom · **Style:** transitional · **Light:** moderate · **Privacy:** medium
**Colors:** light grey, white, beige, silver

ELEGANT ESSENTIAL

### grommet panels

**Fabric:** medium weight polyester blend

**Lining:** standard privacy lining

**Hardware:** teak wood rod with silver grommets

### $500 – $1,000

*The grommet panels in a retro geometric print would hang elegantly from a warm teak rod, providing a subtle mid-century vibe. The fabric, a medium weight polyester blend, would drape smoothly, allowing soft light to filter through while maintaining privacy. The silver grommets would add a touch of modern contrast against the warm wood.*

This option provides a budget-friendly yet stylish solution that aligns with the mid-century aesthetic, offering both functionality and visual appeal without overwhelming the space.

DESIGNER'S CHOICE

### layered treatment (sheer + drapery)

**Fabric:** linen blend for drapery, silk for sheer

**Lining:** thermal blackout lining for drapery, none for sheer

**Hardware:** brushed nickel double rod

**Extras:** interlining for drapery

### $1,500 – $3,000

*The layered treatment features a geometric print linen blend drapery with a solid silk sheer underneath. The sheer would allow a gentle diffusion of light, creating a soft glow in the room, while the drapery, with its thermal blackout lining, would provide privacy and insulation. The brushed nickel double rod would add a sleek, contemporary touch, complementing the room's transitional style.*

This mid-range luxury option enhances the room's sophistication by adding depth and texture through layering. The combination of patterns and solids, along with the use of different fabrics, creates a rich, inviting atmosphere.

ULTIMATE LUXURY

### full custom treatment

**Fabric:** silk velvet for drapery, designer print silk for valance

**Lining:** blackout interlining for drapery, none for valance

**Hardware:** custom hand-forged iron rod with crystal finials

**Extras:** motorization, custom silk sheer underlayer

### $5,000 – $10,000

*This ultimate luxury treatment features silk velvet drapery in a soft grey, paired with a striking designer print silk valance. The drapery would hang with a luxurious, heavy drape, providing complete privacy and a rich texture. The valance, with its bold print, would add a focal point above the window. A custom silk sheer underlayer would diffuse light beautifully, creating a serene ambiance. The hand-forged iron rod with crystal finials would add an opulent touch, while motorization offers effortless operation.*

This premium option transforms the window area into a statement piece, combining the finest materials and craftsmanship with modern convenience. The use of high-end fabrics and custom hardware creates a dramatic, luxurious impact, perfectly suited for a high-end residential setting.

## AI-Generated Treatment Mockups

ELEGANT ESSENTIAL

DESIGNER'S CHOICE

ULTIMATE LUXURY

**Recommendations:**

- Consider the room's use of natural light throughout the day to adjust the opacity of the treatments.
- Ensure the window treatments complement the existing furniture and decor to maintain a cohesive look.
- Incorporate elements that can be easily updated or changed to keep the room feeling fresh over time.

## MAX's Analysis

AI-powered insights from photo analysis

### Living Room → ELEGANT ESSENTIAL

double hung (AI confidence: 95%)

→ The grommet panels in a retro geometric print would hang elegantly from a warm teak rod, providing a subtle mid-century vibe. The fabric, a medium weight polyester blend, would drape smoothly, allowing soft light to filter through while maintaining privacy. The silver grommets would add a touch of modern contrast against the warm wood.

→ This option provides a budget-friendly yet stylish solution that aligns with the mid-century aesthetic, offering both functionality and visual appeal without overwhelming the space.

### Living Room → DESIGNER'S CHOICE

double hung (AI confidence: 95%)

→ The layered treatment features a geometric print linen blend drapery with a solid silk sheer underneath. The sheer would allow a gentle diffusion of light, creating a soft glow in the room, while the drapery, with its thermal blackout lining, would provide privacy and insulation. The brushed nickel double rod would add a sleek, contemporary touch, complementing the room's transitional style.

→ This mid-range luxury option enhances the room's sophistication by adding depth and texture through layering. The combination of patterns and solids, along with the use of different fabrics, creates a rich, inviting atmosphere.

### Living Room → ULTIMATE LUXURY

double hung (AI confidence: 95%)

→ This ultimate luxury treatment features silk velvet drapery in a soft grey, paired with a striking designer print silk valance. The drapery would hang with a luxurious, heavy drape, providing complete privacy and a rich texture. The valance, with its bold print, would add a focal point above the window. A custom silk sheer underlayer would diffuse light beautifully, creating a serene ambiance. The hand-forged iron rod with crystal finials would add an opulent touch, while motorization offers effortless operation.

→ This premium option transforms the window area into a statement piece, combining the finest materials and craftsmanship with modern convenience. The use of high-end fabrics and custom hardware creates a dramatic, luxurious impact, perfectly suited for a high-end residential setting.

### TERMS & CONDITIONS

50% deposit required. Balance due upon completion.

### ACCEPTANCE

By signing below, I accept this estimate and authorize Empire to proceed with the work described above.

Client Signature

Date