Empire

Custom Window Treatments & Upholstery

ESTIMATE

EST-2026-039

Date: 2026-03-02

Valid until: 2026-04-01

PREPARED FOR

DANNY DELMAR

PROJECT

AI Design Consultation

Room 1

Choose one of the following treatment options:

OPTION	TREATMENT	FABRIC & LINING	HARDWARE	EXTRAS	PRICE RANGE
ELEGANT ESSENTIAL	**single-layer panels**	cotton-polyester blend in solid light gray — clean, simple *privacy lining*	basic brushed nickel rod with matching finials	—	**$200 – $600**
DESIGNER'S CHOICE	**Roman shade with sheer underlay**	textured linen with a subtle herringbone pattern in soft dove gray — layered, textured *blackout lining with interlining*	ornamental rod with detailed finials in matte black	sheer underlay	**$600 – $1,500**
ULTIMATE LUXURY	**sheers + functional drapery panels + decorative cornice**	crushed silk velvet with a deep luster in a rich charcoal gray, silk dupioni sheers in a light silver — premium, statement, multi-layered *contrast lining reveal in soft ivory*	custom hand-forged iron rod with crystal finials, motorized track for sheers	tassel tiebacks, beaded fringe on cornice	**$1,500 – $4,000**

ELEGANT ESSENTIAL

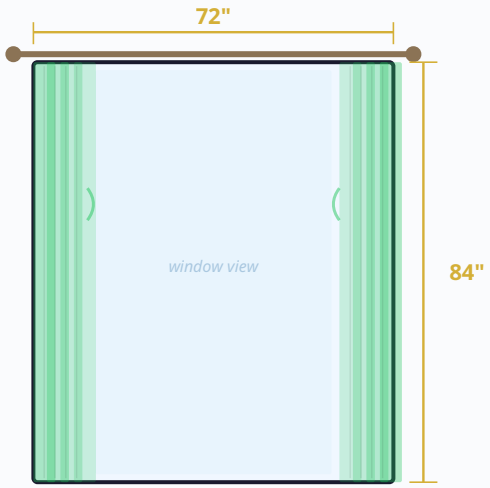

single-layer panels

basic brushed nickel rod with matching finials

$200 – $600

DESIGNER'S CHOICE

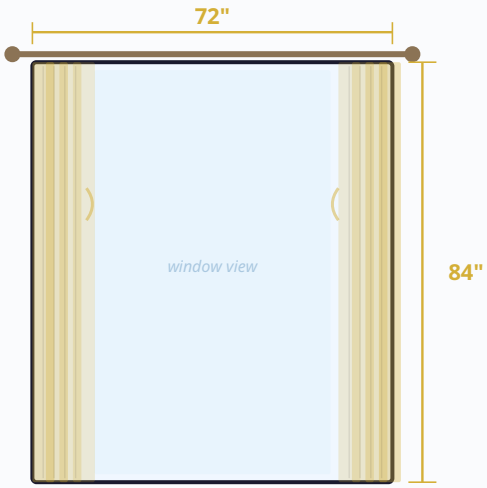

Roman shade with sheer underlay

ornamental rod with detailed finials in matte black

$600 – $1,500

ULTIMATE LUXURY

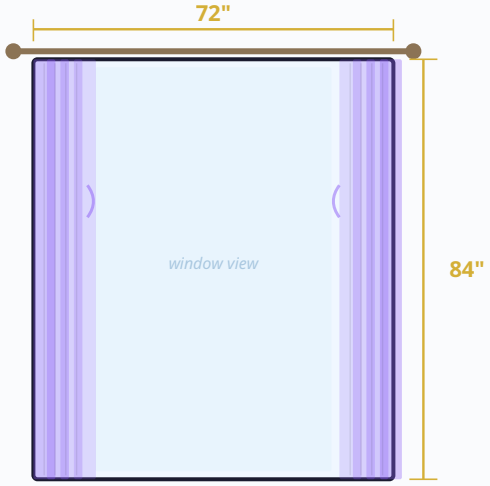

sheers + functional drapery panels + decorative cornice

custom hand-forged iron rod with crystal finials, motorized track for sheers

$1,500 – $4,000

ELEGANT ESSENTIAL · double hung (95%)

→ The window is adorned with light gray cotton-polyester blend panels that hang straight and smooth, providing a clean and elegant look. The fabric has a matte finish, allowing for a soft diffusion of light while maintaining privacy. The brushed nickel rod with simple finials complements the room's transitional style, creating a cohesive and functional aesthetic.

→ This simple approach works well in the space as it maintains the room's clean lines and neutral palette, enhancing the serene atmosphere without overwhelming the existing decor. The light gray fabric blends seamlessly with the wall color, ensuring a harmonious look.

DESIGNER'S CHOICE · double hung (95%)

→ A Roman shade made of textured linen with a subtle herringbone pattern in soft dove gray provides a sophisticated texture. The shade has a blackout lining with an interlining for added body and insulation, creating a cozy feel. Behind the shade, sheer white panels softly diffuse light, adding depth and a gentle glow to the room. The hardware is an ornamental rod with intricate matte black finials, adding a touch of elegance and contrast to the overall look.

→ The layered approach with the Roman shade and sheer underlay adds visual interest and functionality. The textured linen provides warmth and texture, while the sheer underlay allows for light control and privacy modulation. This combination enhances the room's transitional style, offering both style and practicality.

ULTIMATE LUXURY · double hung (95%)

→ The window treatment is a statement of luxury, featuring light silver silk dupioni sheers that glow with light, creating a soft, ethereal backdrop. Over the sheers, rich charcoal gray crushed silk velvet panels drape elegantly, pooling slightly on the floor for a dramatic effect. The panels are lined with a soft ivory contrast lining, adding a subtle surprise when light filters through. A custom hand-forged iron rod with sparkling crystal finials supports the panels, while a motorized track ensures smooth operation of the sheers. Above, a decorative cornice, adorned with beaded fringe, frames the entire setup, adding height and grandeur. Tassel tiebacks complete the look, offering both functionality and opulence.

→ This multi-layered treatment creates a 'wow factor' with its rich textures, luxurious fabrics, and intricate details. The combination of sheer silk dupioni with the deep luster of crushed silk velvet provides a dramatic contrast, enhancing the room's elegance. The motorized system adds modern convenience, while the custom hardware and decorative elements ensure a bespoke, opulent feel that makes the window treatment the focal point of the room.

Treatment options range from **$200 – $4,000**

Design Proposals — Room 1

Reference Photo

Room: bedroom · **Style:** transitional · **Light:** moderate · **Privacy:** medium
Colors: light gray, white, dark wood

ELEGANT ESSENTIAL

single-layer panels

Fabric: cotton-polyester blend in solid light gray

Lining: privacy lining

Hardware: basic brushed nickel rod with matching finials

$200 – $600

The window is adorned with light gray cotton-polyester blend panels that hang straight and smooth, providing a clean and elegant look. The fabric has a matte finish, allowing for a soft diffusion of light while maintaining privacy. The brushed nickel rod with simple finials complements the room's transitional style, creating a cohesive and functional aesthetic.

This simple approach works well in the space as it maintains the room's clean lines and neutral palette, enhancing the serene atmosphere without overwhelming the existing decor. The light gray fabric blends seamlessly with the wall color, ensuring a harmonious look.

DESIGNER'S CHOICE

Roman shade with sheer underlay

Fabric: textured linen with a subtle herringbone pattern in soft dove gray

Lining: blackout lining with interlining

Hardware: ornamental rod with detailed finials in matte black

Extras: sheer underlay

$600 – $1,500

A Roman shade made of textured linen with a subtle herringbone pattern in soft dove gray provides a sophisticated texture. The shade has a blackout lining with an interlining for added body and insulation, creating a cozy feel. Behind the shade, sheer white panels softly diffuse light, adding depth and a gentle glow to the room. The hardware is an ornamental rod with intricate matte black finials, adding a touch of elegance and contrast to the overall look.

The layered approach with the Roman shade and sheer underlay adds visual interest and functionality. The textured linen provides warmth and texture, while the sheer underlay allows for light control and privacy modulation. This combination enhances the room's transitional style, offering both style and practicality.

ULTIMATE LUXURY

sheers + functional drapery panels + decorative cornice

Fabric: crushed silk velvet with a deep luster in a rich charcoal gray, silk dupioni sheers in a light silver

Lining: contrast lining reveal in soft ivory

Hardware: custom hand-forged iron rod with crystal finials, motorized track for sheers

Extras: tassel tiebacks, beaded fringe on cornice

$1,500 – $4,000

The window treatment is a statement of luxury, featuring light silver silk dupioni sheers that glow with light, creating a soft, ethereal backdrop. Over the sheers, rich charcoal gray crushed silk velvet panels drape elegantly, pooling slightly on the floor for a dramatic effect. The panels are lined with a soft ivory contrast lining, adding a subtle surprise when light filters through. A custom hand-forged iron rod with sparkling crystal finials supports the panels, while a motorized track ensures smooth operation of the sheers. Above, a decorative cornice, adorned with beaded fringe, frames the entire setup, adding height and grandeur. Tassel tiebacks complete the look, offering both functionality and opulence.

This multi-layered treatment creates a 'wow factor' with its rich textures, luxurious fabrics, and intricate details. The combination of sheer silk dupioni with the deep luster of crushed silk velvet provides a dramatic contrast, enhancing the room's elegance. The motorized system adds modern convenience, while the custom hardware and decorative elements ensure a bespoke, opulent feel that makes the window treatment the focal point of the room.

AI-Generated Treatment Mockups

ELEGANT ESSENTIAL

single-layer panels — clean, simple

$200 – $600

Fabric: cotton-polyester blend in solid light gray **Lining:** privacy lining **Hardware:** basic brushed nickel rod with matching finials

The window is adorned with light gray cotton-polyester blend panels that hang straight and smooth, providing a clean and elegant look. The fabric has a matte finish, allowing for a soft diffusion of light while maintaining privacy. The brushed nickel rod with simple finials complements the room's transitional style, creating a cohesive and functional aesthetic.

This simple approach works well in the space as it maintains the room's clean lines and neutral palette, enhancing the serene atmosphere without overwhelming the existing decor. The light gray fabric blends seamlessly with the wall color, ensuring a harmonious look.

DESIGNER'S CHOICE

Roman shade with sheer underlay — layered, textured

$600 – $1,500

Fabric: textured linen with a subtle herringbone pattern in soft dove gray **Lining:** blackout lining with interlining

Hardware: ornamental rod with detailed finials in matte black **Extras:** sheer underlay

A Roman shade made of textured linen with a subtle herringbone pattern in soft dove gray provides a sophisticated texture. The shade has a blackout lining with an interlining for added body and insulation, creating a cozy feel. Behind the shade, sheer white panels softly diffuse light, adding depth and a gentle glow to the room. The hardware is an ornamental rod with intricate matte black finials, adding a touch of elegance and contrast to the overall look.

The layered approach with the Roman shade and sheer underlay adds visual interest and functionality. The textured linen provides warmth and texture, while the sheer underlay allows for light control and privacy modulation. This combination enhances the room's transitional style, offering both style and practicality.

ULTIMATE LUXURY

sheers + functional drapery panels + decorative cornice — premium, statement, multi-layered

$1,500 – $4,000

Fabric: crushed silk velvet with a deep luster in a rich charcoal gray, silk dupioni sheers in a light silver

Lining: contrast lining reveal in soft ivory

Hardware: custom hand-forged iron rod with crystal finials, motorized track for sheers

Extras: tassel tiebacks, beaded fringe on cornice

The window treatment is a statement of luxury, featuring light silver silk dupioni sheers that glow with light, creating a soft, ethereal backdrop. Over the sheers, rich charcoal gray crushed silk velvet panels drape elegantly, pooling slightly on the floor for a dramatic effect. The panels are lined with a soft ivory contrast lining, adding a subtle surprise when light filters through. A custom hand-forged iron rod with sparkling crystal finials supports the panels, while a motorized track ensures smooth operation of the sheers. Above, a decorative cornice, adorned with beaded fringe, frames the entire setup, adding height and grandeur. Tassel tiebacks complete the look, offering both functionality and opulence.

This multi-layered treatment creates a 'wow factor' with its rich textures, luxurious fabrics, and intricate details. The combination of sheer silk dupioni with the deep luster of crushed silk velvet provides a dramatic contrast, enhancing the room's elegance. The motorized system adds modern convenience, while the custom hardware and decorative elements ensure a bespoke, opulent feel that makes the window treatment the focal point of the room.

Recommendations:

- Ensure all hardware is mounted above or behind any valance or cornice for a seamless look.
- Choose fabric weights that complement the hardware strength; heavier fabrics like velvet require sturdy rods.
- Colors should be selected to complement the existing room palette, ensuring harmony.

MAX's Analysis

AI-powered insights from photo analysis

Room 1 → ELEGANT ESSENTIAL

double hung (AI confidence: 95%)

→ The window is adorned with light gray cotton-polyester blend panels that hang straight and smooth, providing a clean and elegant look. The fabric has a matte finish, allowing for a soft diffusion of light while maintaining privacy. The brushed nickel rod with simple finials complements the room's transitional style, creating a cohesive and functional aesthetic.

→ This simple approach works well in the space as it maintains the room's clean lines and neutral palette, enhancing the serene atmosphere without overwhelming the existing decor. The light gray fabric blends seamlessly with the wall color, ensuring a harmonious look.

Room 1 → DESIGNER'S CHOICE

double hung (AI confidence: 95%)

→ A Roman shade made of textured linen with a subtle herringbone pattern in soft dove gray provides a sophisticated texture. The shade has a blackout lining with an interlining for added body and insulation, creating a cozy feel. Behind the shade, sheer white panels softly diffuse light, adding depth and a gentle glow to the room. The hardware is an ornamental rod with intricate matte black finials, adding a touch of elegance and contrast to the overall look.

→ The layered approach with the Roman shade and sheer underlay adds visual interest and functionality. The textured linen provides warmth and texture, while the sheer underlay allows for light control and privacy modulation. This combination enhances the room's transitional style, offering both style and practicality.

Room 1 → ULTIMATE LUXURY

double hung (AI confidence: 95%)

→ The window treatment is a statement of luxury, featuring light silver silk dupioni sheers that glow with light, creating a soft, ethereal backdrop. Over the sheers, rich charcoal gray crushed silk velvet panels drape elegantly, pooling slightly on the floor for a dramatic effect. The panels are lined with a soft ivory contrast lining, adding a subtle surprise when light filters through. A custom hand-forged iron rod with sparkling crystal finials supports the panels, while a motorized track ensures smooth operation of the sheers. Above, a decorative cornice, adorned with beaded fringe, frames the entire setup, adding height and grandeur. Tassel tiebacks complete the look, offering both functionality and opulence.

→ This multi-layered treatment creates a 'wow factor' with its rich textures, luxurious fabrics, and intricate details. The combination of sheer silk dupioni with the deep luster of crushed silk velvet provides a dramatic contrast, enhancing the room's elegance. The motorized system adds modern convenience, while the custom hardware and decorative elements ensure a bespoke, opulent feel that makes the window treatment the focal point of the room.

TERMS & CONDITIONS

50% deposit required. Balance due upon completion.

ACCEPTANCE

By signing below, I accept this estimate and authorize Empire to proceed with the work described above.

Client Signature

Date