Empire

Custom Window Treatments & Upholstery

ESTIMATE

EST-2026-042

Date: 2026-03-02

Valid until: 2026-04-01

PREPARED FOR

DANNY DELMAR

PROJECT

AI Design Consultation

Room 1

Choose one of the following treatment options:

OPTION	TREATMENT	FABRIC & LINING	HARDWARE	EXTRAS	PRICE RANGE
Elegant Essential	**single-layer panels**	cotton-polyester blend in solid light gray — clean and simple *privacy lining*	basic brushed nickel rod with matching finials	—	**$200 – $600**
Designer's Choice	**Roman shade with sheer underlay**	textured linen with a subtle crosshatch pattern in medium gray — layered and textured *blackout lining with interlining*	ornamental rod with detailed crystal finials	sheer underlay	**$600 – $1,500**
Ultimate Luxury	**sheers + drapery panels + cornice**	crushed silk velvet with a deep luster in charcoal gray — premium and statement *contrast lining reveal in silver*	custom hand-forged iron rod with gilded brackets, motorized track	decorative trim, tassel tiebacks, beaded fringe	**$1,500 – $4,000**

Elegant Essential

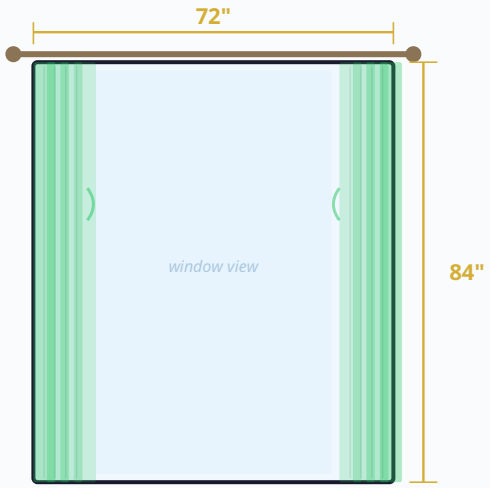

single-layer panels

basic brushed nickel rod with matching finials

$200 – $600

Designer's Choice

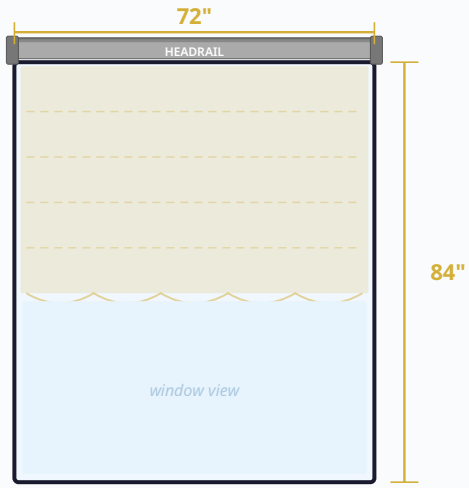

Roman shade with sheer underlay

Headrail · Cordless

$600 – $1,500

Ultimate Luxury

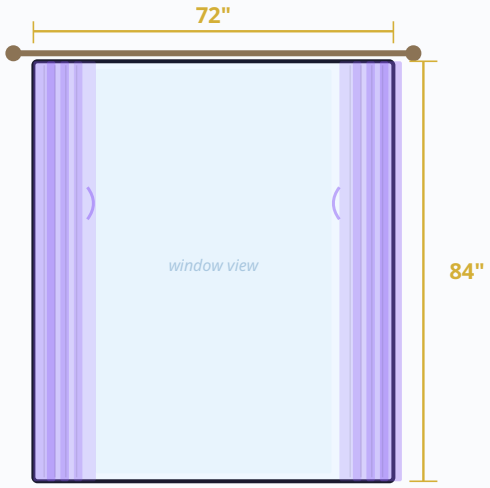

sheers + drapery panels + cornice

custom hand-forged iron rod with gilded brackets, motorized track

$1,500 – $4,000

Elegant Essential · double hung (95%)

→ The window is adorned with light gray cotton-polyester blend panels that hang straight and smooth, providing a clean and elegant look. The fabric has a matte finish, allowing soft light to filter through while maintaining privacy. The brushed nickel rod with simple finials adds a touch of modern sophistication without overwhelming the space.

→ This simple approach works well for the space as it complements the transitional style of the room, providing functionality without adding visual clutter. The light gray color blends seamlessly with the existing decor, enhancing the serene atmosphere of the bedroom.

Designer's Choice · double hung (95%)

→ A Roman shade made from medium gray textured linen with a subtle crosshatch pattern is the focal point. The fabric has a nubby texture that adds depth and interest. Behind the shade, a layer of sheer white fabric allows light to glow softly, creating a warm ambiance. The shade is mounted on an ornamental rod with crystal finials, adding a touch of elegance. The blackout lining ensures complete darkness when needed, while the interlining adds body and a luxurious feel.

→ The layered approach with the Roman shade and sheer underlay provides both functionality and aesthetic appeal. The textured linen adds visual interest, while the sheer layer softens the light, creating a cozy and inviting atmosphere. The crystal finials introduce a hint of luxury, enhancing the mid-range design.

Ultimate Luxury · double hung (95%)

→ The window is transformed into a statement piece with layers of luxury. Sheer white silk panels hang closest to the glass, allowing light to shimmer through. Over these, full-length drapery panels of crushed silk velvet in charcoal gray drape elegantly, with a deep luster that catches the light beautifully. The panels are lined with a contrasting silver lining that peeks out subtly when drawn. Above, a custom cornice in the same velvet fabric crowns the treatment, adding height and drama. The hand-forged iron rod with gilded brackets and motorized track ensures smooth operation, while decorative trim, tassel tiebacks, and beaded fringe add intricate details, creating a grand and opulent look.

→ This ultimate luxury design creates a 'wow factor' with its rich textures, deep colors, and intricate details. The combination of sheers, velvet drapery, and a cornice provides a multi-dimensional look that is both dramatic and serene. The motorized feature adds modern convenience, while the custom hardware and extras elevate the design to a level of opulence that makes the room feel like a luxurious retreat.

Treatment options range from **$200 – $4,000**

Design Proposals — Room 1

Reference Photo

Room: bedroom · **Style:** transitional · **Light:** moderate · **Privacy:** medium
Colors: light gray, white, dark wood

AI-Generated Treatment Mockups

ELEGANT ESSENTIAL

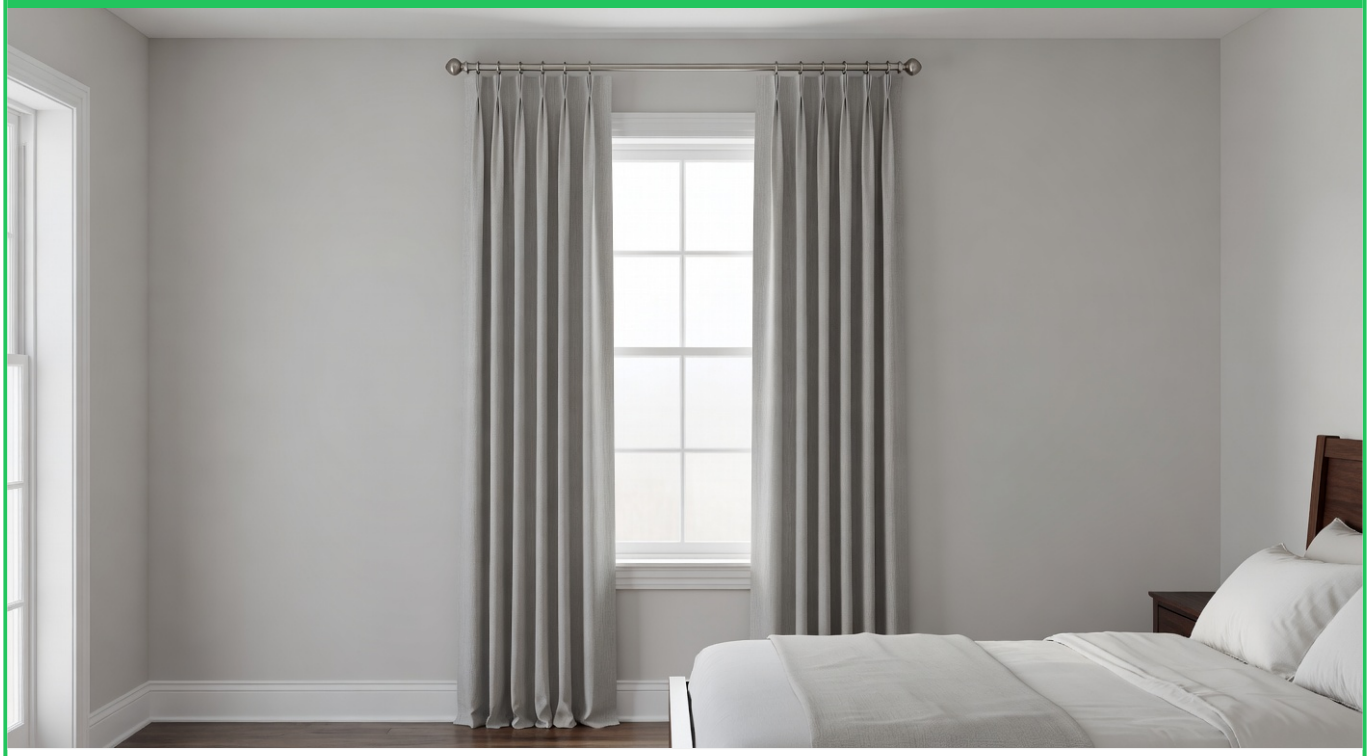

single-layer panels — clean and simple

$200 – $600

Fabric: cotton-polyester blend in solid light gray **Lining:** privacy lining **Hardware:** basic brushed nickel rod with matching finials

The window is adorned with light gray cotton-polyester blend panels that hang straight and smooth, providing a clean and elegant look. The fabric has a matte finish, allowing soft light to filter through while maintaining privacy. The brushed nickel rod with simple finials adds a touch of modern sophistication without overwhelming the space.

This simple approach works well for the space as it complements the transitional style of the room, providing functionality without adding visual clutter. The light gray color blends seamlessly with the existing decor, enhancing the serene atmosphere of the bedroom.

DESIGNER'S CHOICE

Roman shade with sheer underlay — layered and textured

$600 – $1,500

Fabric: textured linen with a subtle crosshatch pattern in medium gray **Lining:** blackout lining with interlining

Hardware: ornamental rod with detailed crystal finials **Extras:** sheer underlay

A Roman shade made from medium gray textured linen with a subtle crosshatch pattern is the focal point. The fabric has a nubby texture that adds depth and interest. Behind the shade, a layer of sheer white fabric allows light to glow softly, creating a warm ambiance. The shade is mounted on an ornamental rod with crystal finials, adding a touch of elegance. The blackout lining ensures complete darkness when needed, while the interlining adds body and a luxurious feel.

The layered approach with the Roman shade and sheer underlay provides both functionality and aesthetic appeal. The textured linen adds visual interest, while the sheer layer softens the light, creating a cozy and inviting atmosphere. The crystal finials introduce a hint of luxury, enhancing the mid-range design.

ULTIMATE LUXURY

sheers + drapery panels + cornice — premium and statement

$1,500 – $4,000

Fabric: crushed silk velvet with a deep luster in charcoal gray **Lining:** contrast lining reveal in silver

Hardware: custom hand-forged iron rod with gilded brackets, motorized track **Extras:** decorative trim, tassel tiebacks, beaded fringe

The window is transformed into a statement piece with layers of luxury. Sheer white silk panels hang closest to the glass, allowing light to shimmer through. Over these, full-length drapery panels of crushed silk velvet in charcoal gray drape elegantly, with a deep luster that catches the light beautifully. The panels are lined with a contrasting silver lining that peeks out subtly when drawn. Above, a custom cornice in the same velvet fabric crowns the treatment, adding height and drama. The hand-forged iron rod with gilded brackets and motorized track ensures smooth operation, while decorative trim, tassel tiebacks, and beaded fringe add intricate details, creating a grand and opulent look.

This ultimate luxury design creates a 'wow factor' with its rich textures, deep colors, and intricate details. The combination of sheers, velvet drapery, and a cornice provides a multi-dimensional look that is both dramatic and serene. The motorized feature adds modern convenience, while the custom hardware and extras elevate the design to a level of opulence that makes the room feel like a luxurious retreat.

Recommendations:

- Ensure all hardware is installed above or behind any valance or cornice for a seamless look.
- Choose hardware that complements the weight and style of the fabric for durability and aesthetic harmony.
- Consider the room's existing color palette when selecting fabric colors to ensure cohesion.

MAX's Analysis

AI-powered insights from photo analysis

Room 1 → Elegant Essential

double hung (AI confidence: 95%)

→ The window is adorned with light gray cotton-polyester blend panels that hang straight and smooth, providing a clean and elegant look. The fabric has a matte finish, allowing soft light to filter through while maintaining privacy. The brushed nickel rod with simple finials adds a touch of modern sophistication without overwhelming the space.

→ This simple approach works well for the space as it complements the transitional style of the room, providing functionality without adding visual clutter. The light gray color blends seamlessly with the existing decor, enhancing the serene atmosphere of the bedroom.

Room 1 → Designer's Choice

double hung (AI confidence: 95%)

→ A Roman shade made from medium gray textured linen with a subtle crosshatch pattern is the focal point. The fabric has a nubby texture that adds depth and interest. Behind the shade, a layer of sheer white fabric allows light to glow softly, creating a warm ambiance. The shade is mounted on an ornamental rod with crystal finials, adding a touch of elegance. The blackout lining ensures complete darkness when needed, while the interlining adds body and a luxurious feel.

→ The layered approach with the Roman shade and sheer underlay provides both functionality and aesthetic appeal. The textured linen adds visual interest, while the sheer layer softens the light, creating a cozy and inviting atmosphere. The crystal finials introduce a hint of luxury, enhancing the mid-range design.

Room 1 → Ultimate Luxury

double hung (AI confidence: 95%)

→ The window is transformed into a statement piece with layers of luxury. Sheer white silk panels hang closest to the glass, allowing light to shimmer through. Over these, full-length drapery panels of crushed silk velvet in charcoal gray drape elegantly, with a deep luster that catches the light beautifully. The panels are lined with a contrasting silver lining that peeks out subtly when drawn. Above, a custom cornice in the same velvet fabric crowns the treatment, adding height and drama. The hand-forged iron rod with gilded brackets and motorized track ensures smooth operation, while decorative trim, tassel tiebacks, and beaded fringe add intricate details, creating a grand and opulent look.

→ This ultimate luxury design creates a 'wow factor' with its rich textures, deep colors, and intricate details. The combination of sheers, velvet drapery, and a cornice provides a multi-dimensional look that is both dramatic and serene. The motorized feature adds modern convenience, while the custom hardware and extras elevate the design to a level of opulence that makes the room feel like a luxurious retreat.

TERMS & CONDITIONS

50% deposit required. Balance due upon completion.

ACCEPTANCE

By signing below, I accept this estimate and authorize Empire to proceed with the work described above.

Client Signature

Date