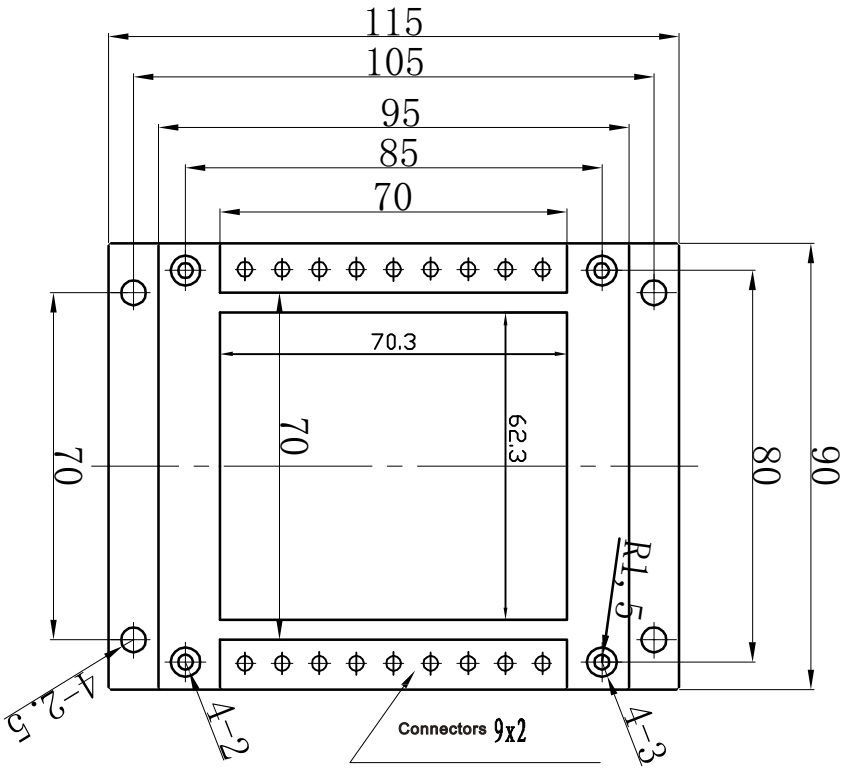
115
105
95
85
70
70.3
70
62.3
70
80
90
R1,5
4-2,5
4-2
Connectors 9x2
4-3

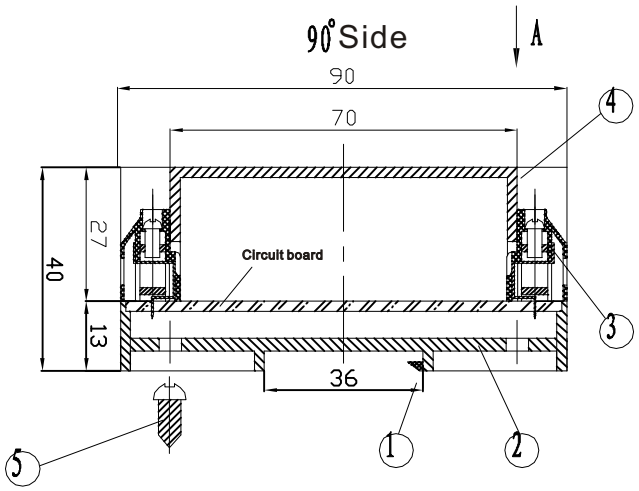
90° Side
A
90
70
27
40
13
Circuit board
36
1
2
3
4
5