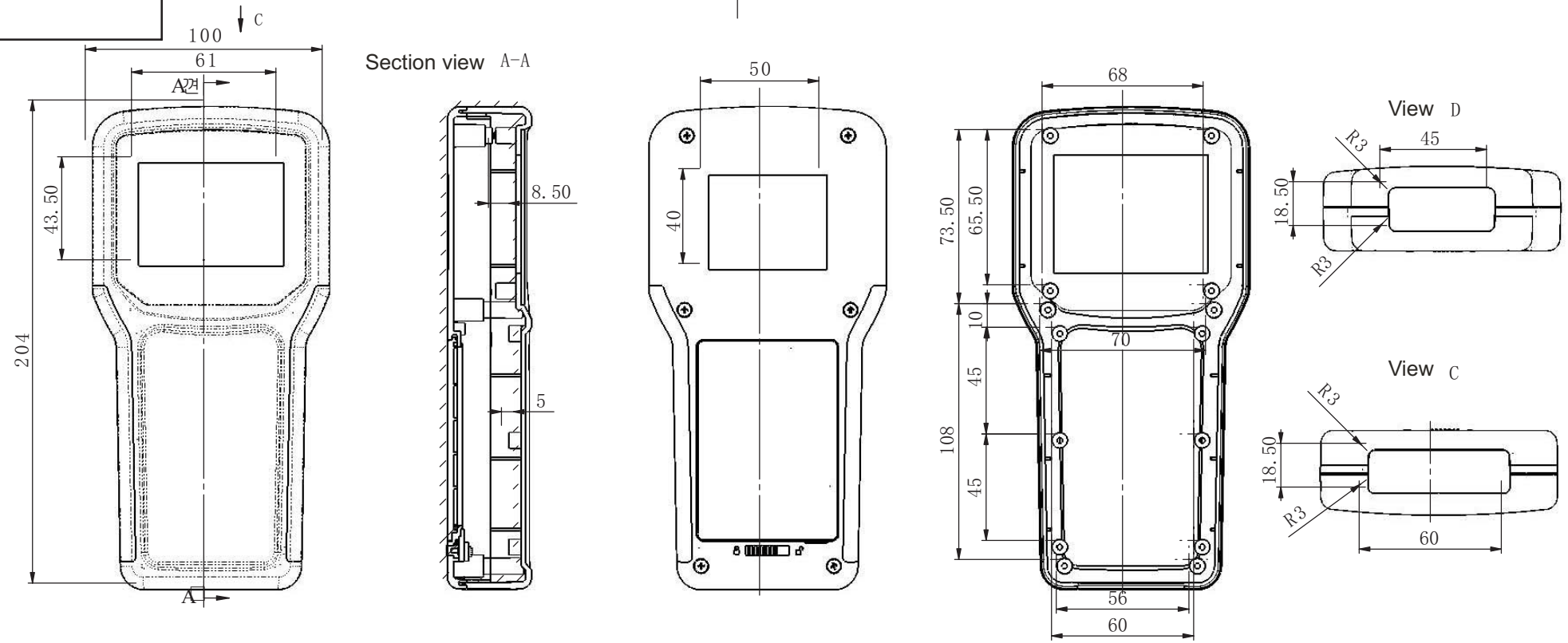

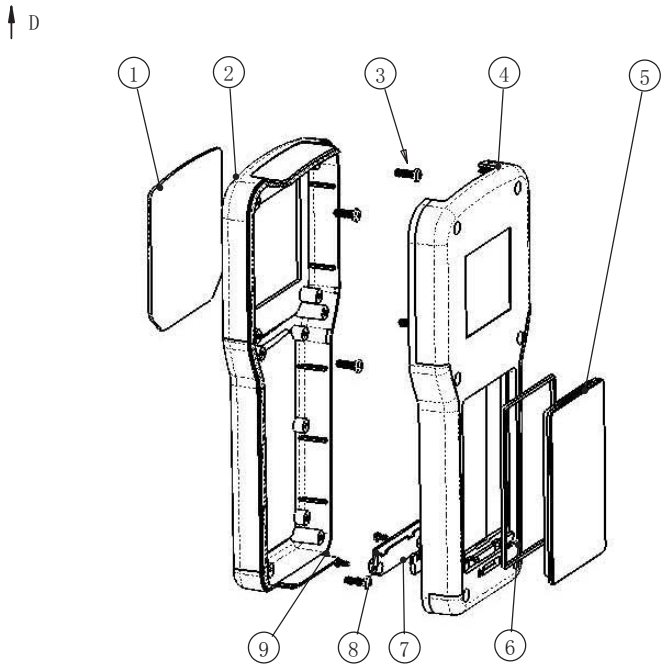

Num	Name		count	Material		
10						
9	ST2.5x6 screw		2	Iron		
8	Battery box cover		1	ABS		
7	Block allocation		1	ABS		
6	Battery cover seal		1	Rubber		
5	Battery cover		1	ABS		
4	Bottom shell		1	ABS+TPE		
3	M3x10 screw		6	Iron		
2	Top Cover		1	ABS+TPE		
1	Transparent plate		1	PC		

Drawing	Auditing	Confirm	Custom Name		Material	
			Product Name	18115	Drawing Scale	A3
			Product Code		Project View	(mm)

IBS Controls