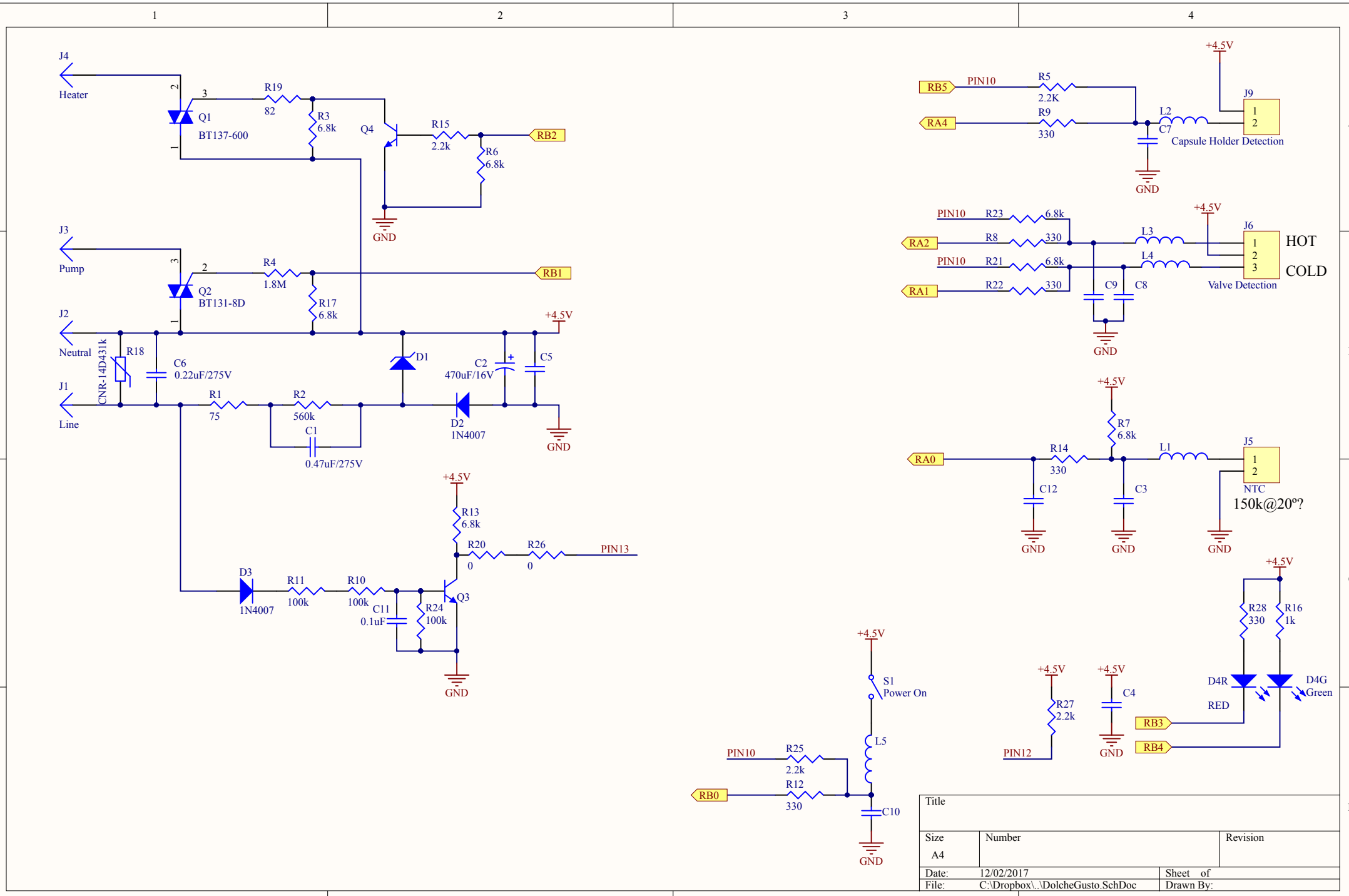
J4
Heater
Q1
BT137-600
R19
82
R3
6.8k
Q4
R15
2.2k
R6
6.8k
RB2
GND
J3
Pump
Q2
BT131-8D
R4
1.8M
R17
6.8k
RB1
J2
Neutral
J1
Line
R18
CNR-14D431k
C6
0.22uF/275V
R1
75
R2
560k
C1
0.47uF/275V
D1
C2
470uF/16V
C5
D2
1N4007
+4.5V
D3
1N4007
R11
100k
R10
100k
C11
0.1uF
R24
100k
Q3
R13
6.8k
R20
0
R26
0
PIN13
RB5
PIN10
R5
2.2K
RA4
R9
330
L2
C7
J9
Capsule Holder Detection
PIN10
R23
6.8k
RA2
R8
330
PIN10
R21
6.8k
RA1
R22
330
L3
L4
C9
C8
J6
HOT
COLD
Valve Detection
RA0
R14
330
R7
6.8k
L1
J5
NTC
150k@20º?
C12
C3
R28
330
R16
1k
D4R
RED
D4G
Green
RB3
RB4
R27
2.2k
PIN12
C4
S1
Power On
L5
PIN10
R25
2.2k
RB0
R12
330
C10
Title
Size
A4
Number
Revision
Date:
12/02/2017
Sheet of
File:
C:\Dropbox\..\DolcheGusto.SchDoc
Drawn By: