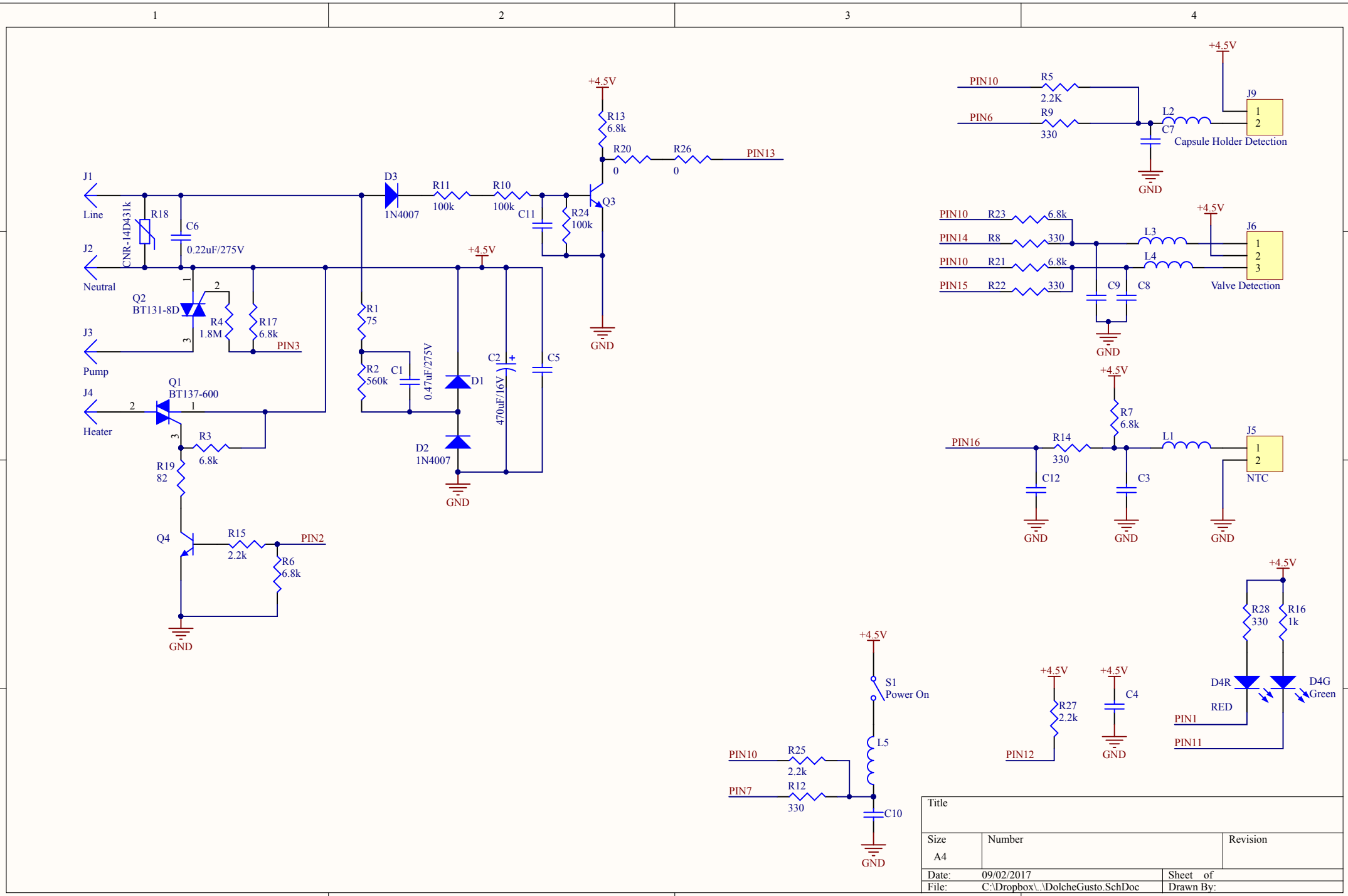

Title		
Size A4	Number	Revision
Date: 09/02/2017		Sheet of
File: C:\Dropbox\..\DolcheGusto.SchDoc		Drawn By: