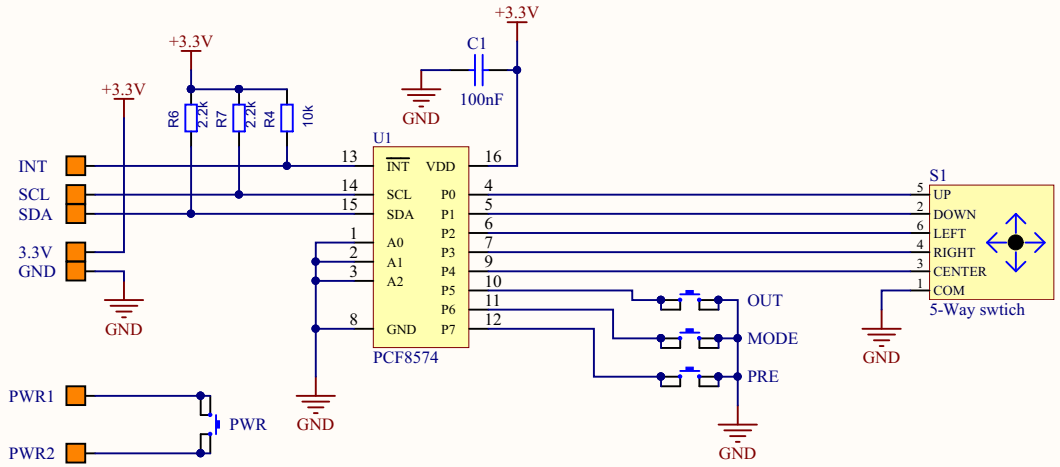

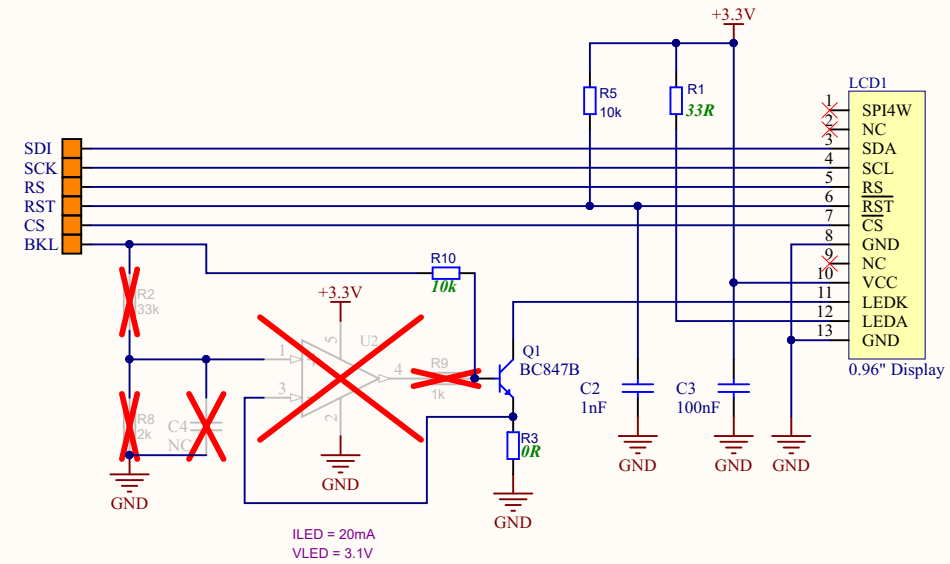

Title		
Size A4	Number	Revision
Date: 14/12/2020		Sheet of
File: C:\Users\..\UserInterface.SchDoc		Drawn By: