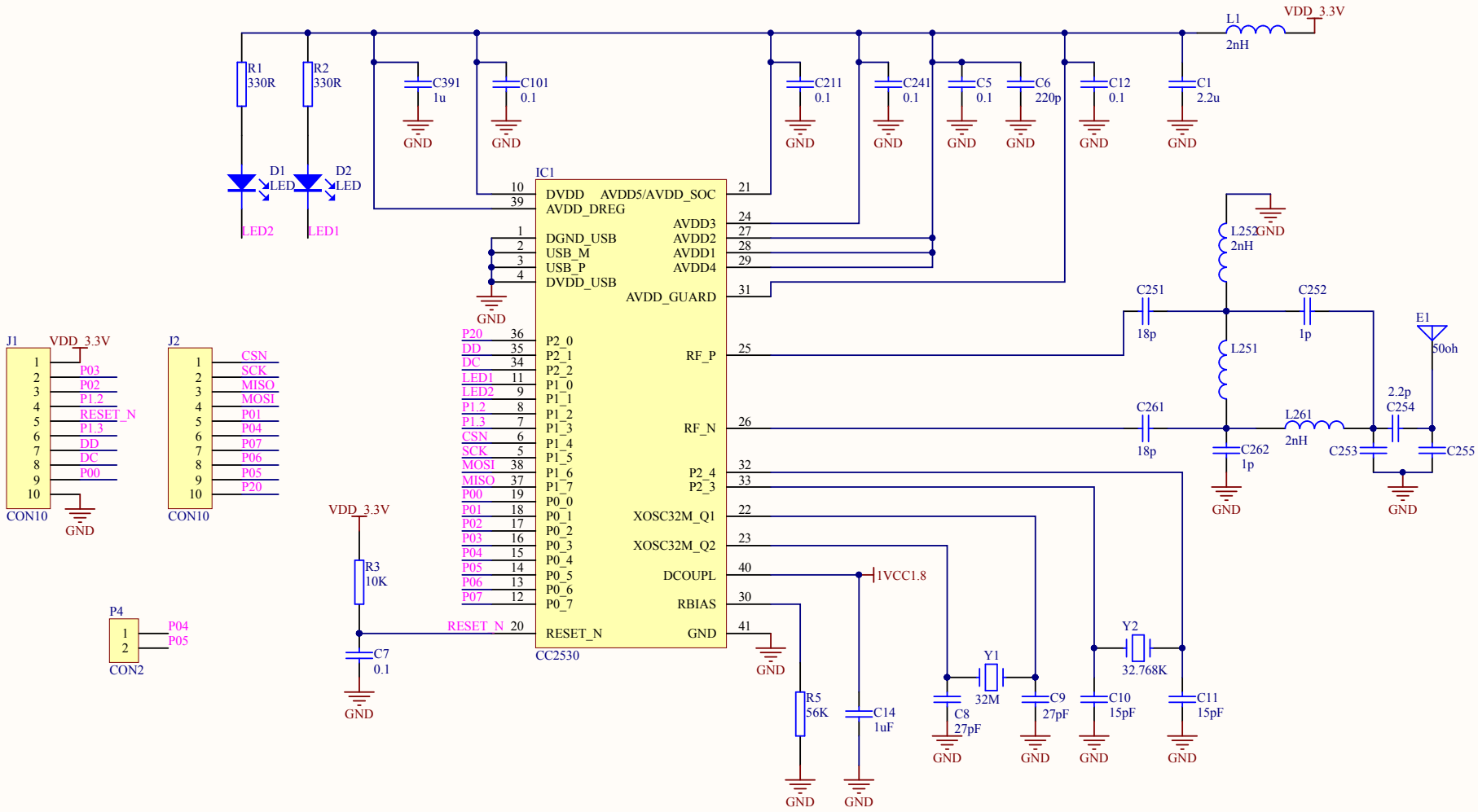

Title		
Size A4	Number	Revision
Date: 3/22/2015	Sheet of	
File: D:\1.Embeded Engineering\..\CC2530.SchDoc	Drawn By:	

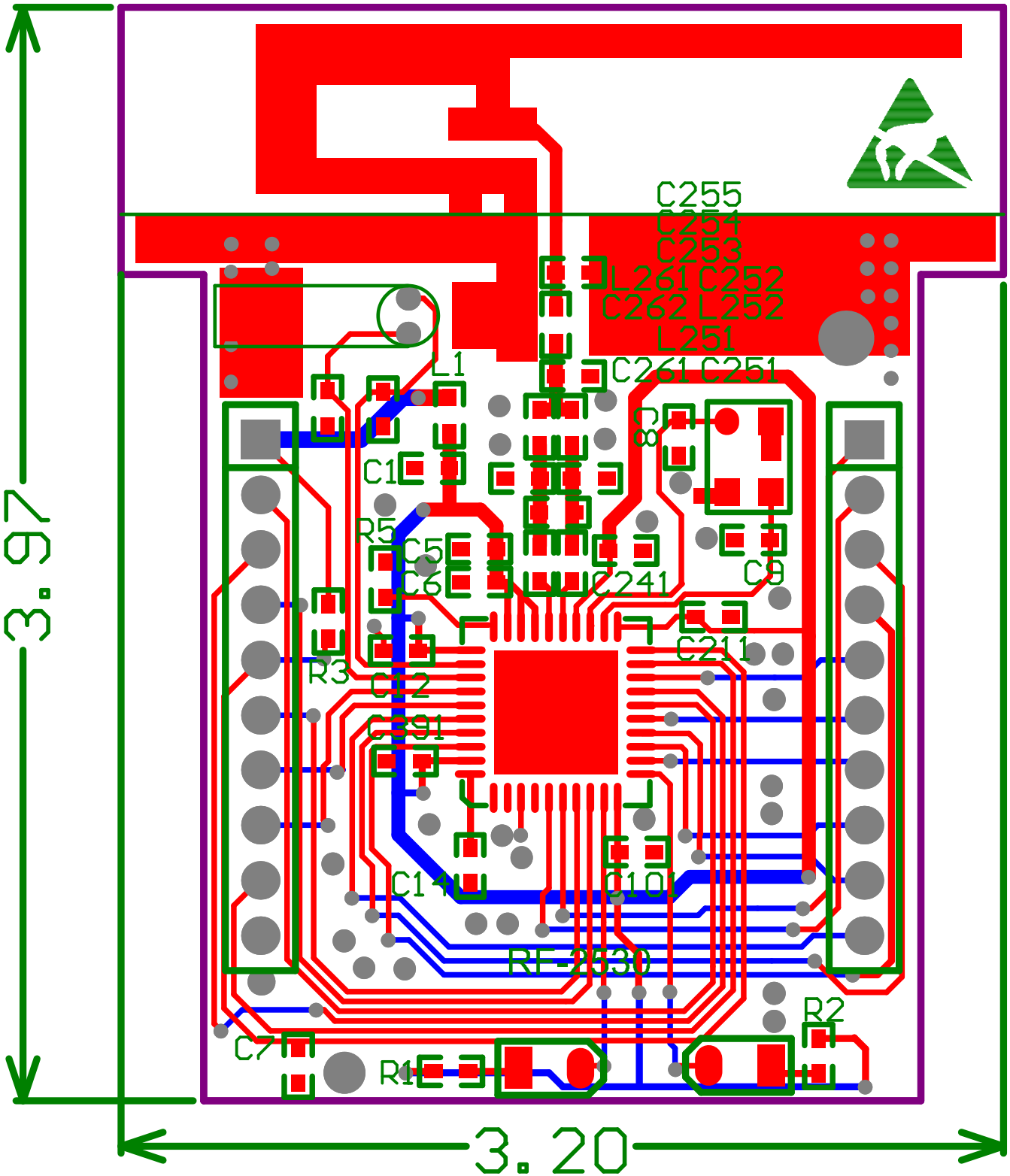
C255
C254
C253
L261 C252
C262 L252
L251
C261 C251
L1
C1
R5
C5
C6
C241
C9
C211
R3
C2
C391
C114
C101
RF-2530
R2
C7
R1
3.97
3.20