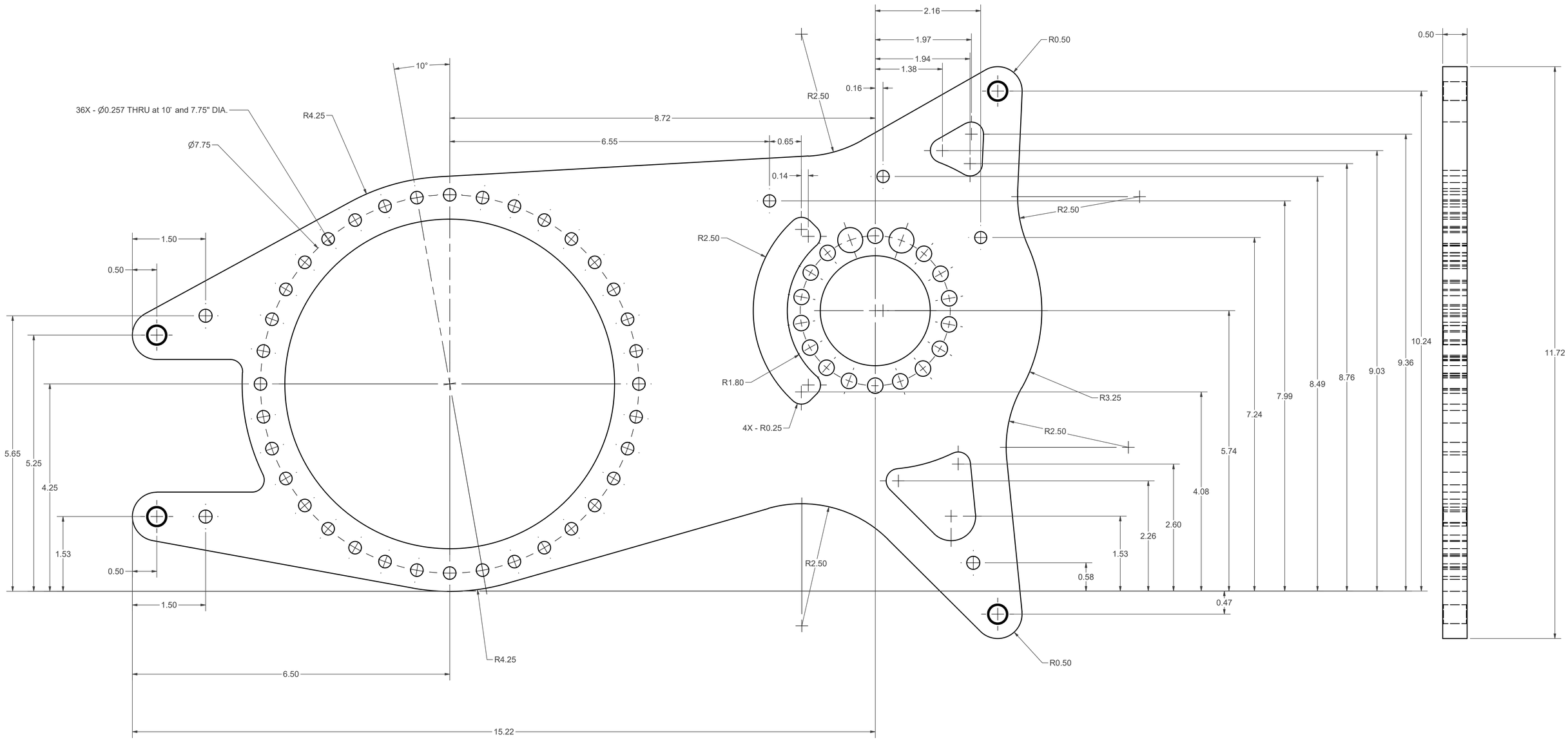


| | | | |
|---|---|---|---|
| *LAFAYETTE COLLEGE ENGINEERING DIVISION* | Left Mounting Plate | DWG.#: DTR-7_D1 | REV: 00 |
| | PART #: DTR-7 QTY: 1 | DRAWN BY: Lucas Foulk | |
| TOLERANCE EXCEPT AS NOTED<br>X/X ± 1/32 X ± .02 XX ± .01 XXX ± .005 | PART FILE: Plate.ipt | SCALE: 1:1 | Approved by: |
| | MATERIAL: 1/2" Aluminum Plate | DATE: 11/17/2020 | |