1	2	3	4	5	6	7	8	9	10

OUT

IN
IN

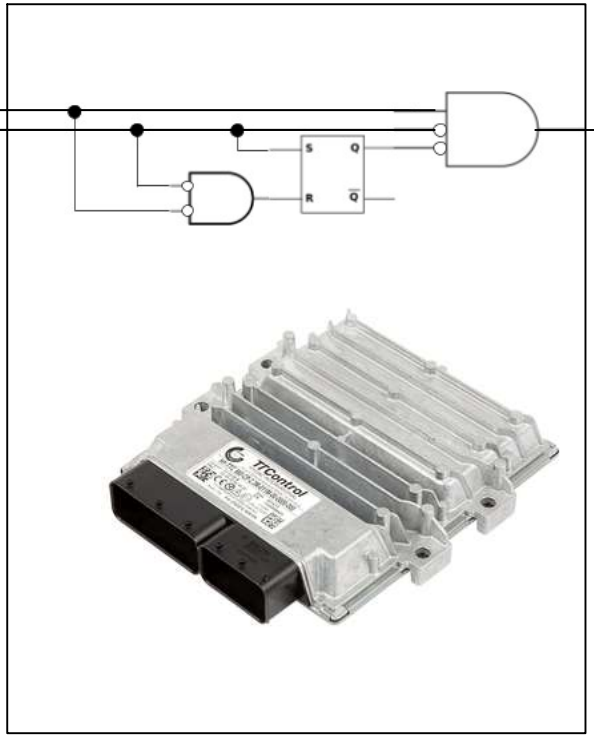

OUT

DesignSpark Electrical

	Document book				REVISION 0
		0	01/03/2022	ricca	SCHEME 02
		REV.	DATE	NAME	CHANGES
CONTRACT:	LOCATION: +L1 Main electrical closet	User data 1		User data 2	

Document realized with version :2019.0.5.114

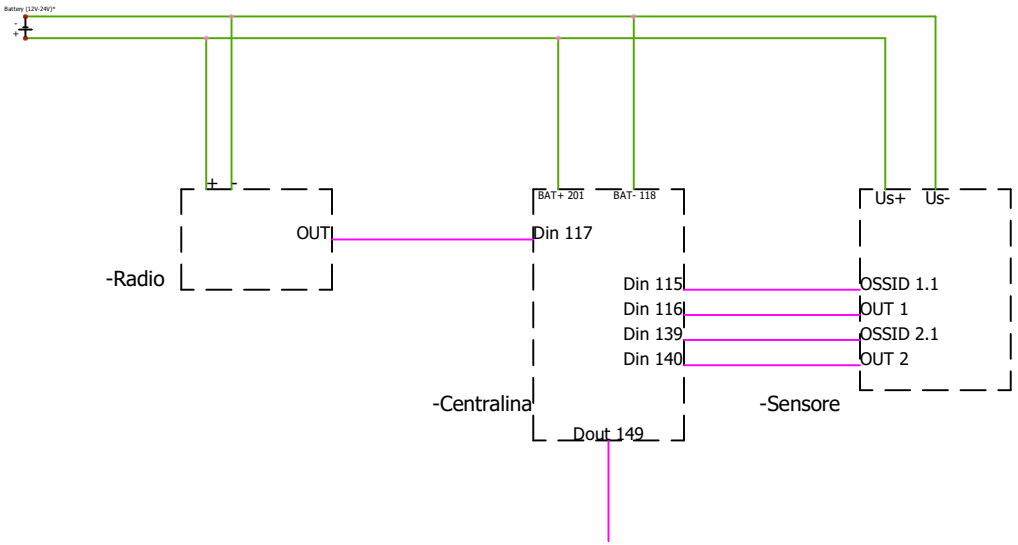

Connector X1	Signal	Pin	Circular connector
Supply voltage	$+U_S$, $-U_S$	2, 7	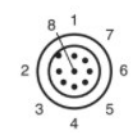
Safe output 1.1	OSSD 1.1	1	
Safe output 1.2	OSSD 1.2	3	
Safe output 2.1	OSSD 2.1	4	
Safe output 2.1	OSSD 2.2	5	
Signal output 1	OUT 1	6	
Signal output 2	OUT 2	8	

DesignSpark Electrical

Document book

REV.	DATE	NAME	CHANGES
0	01/03/2022	ricca	

REVISION 0

SCHEME 03

CONTRACT:

LOCATION: +L1 Main electrical closet

User data 1

User data 2

Document realized with version :2019.0.5.114

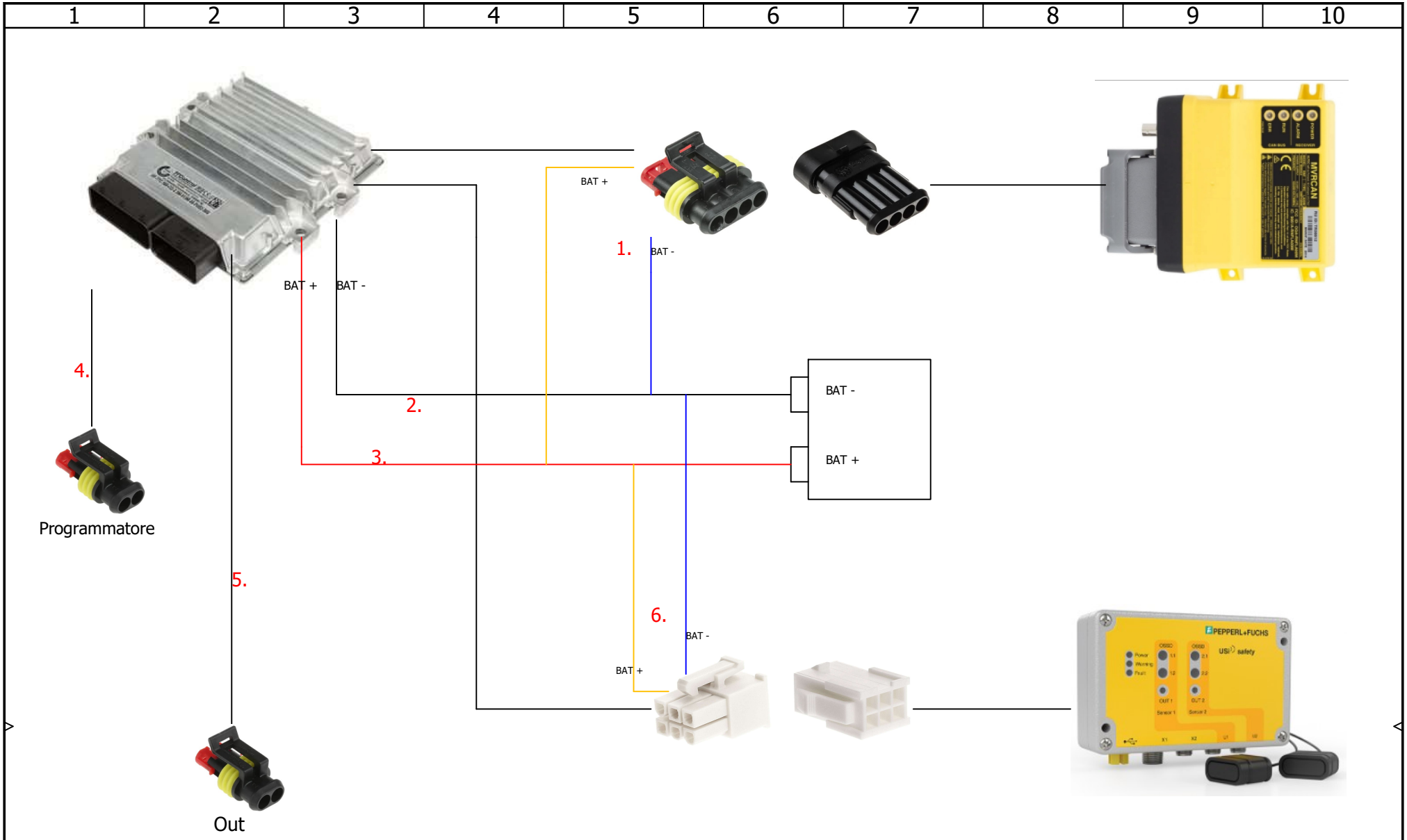
1
2
3
4
5
6
7
8
9
10
BAT +
BAT -
BAT +
BAT -
1.
BAT -
BAT +
2.
3.
4.
Programmatore
5.
Out
6.
BAT -
BAT +
MVRCAN
PEPPERL+FUCHS

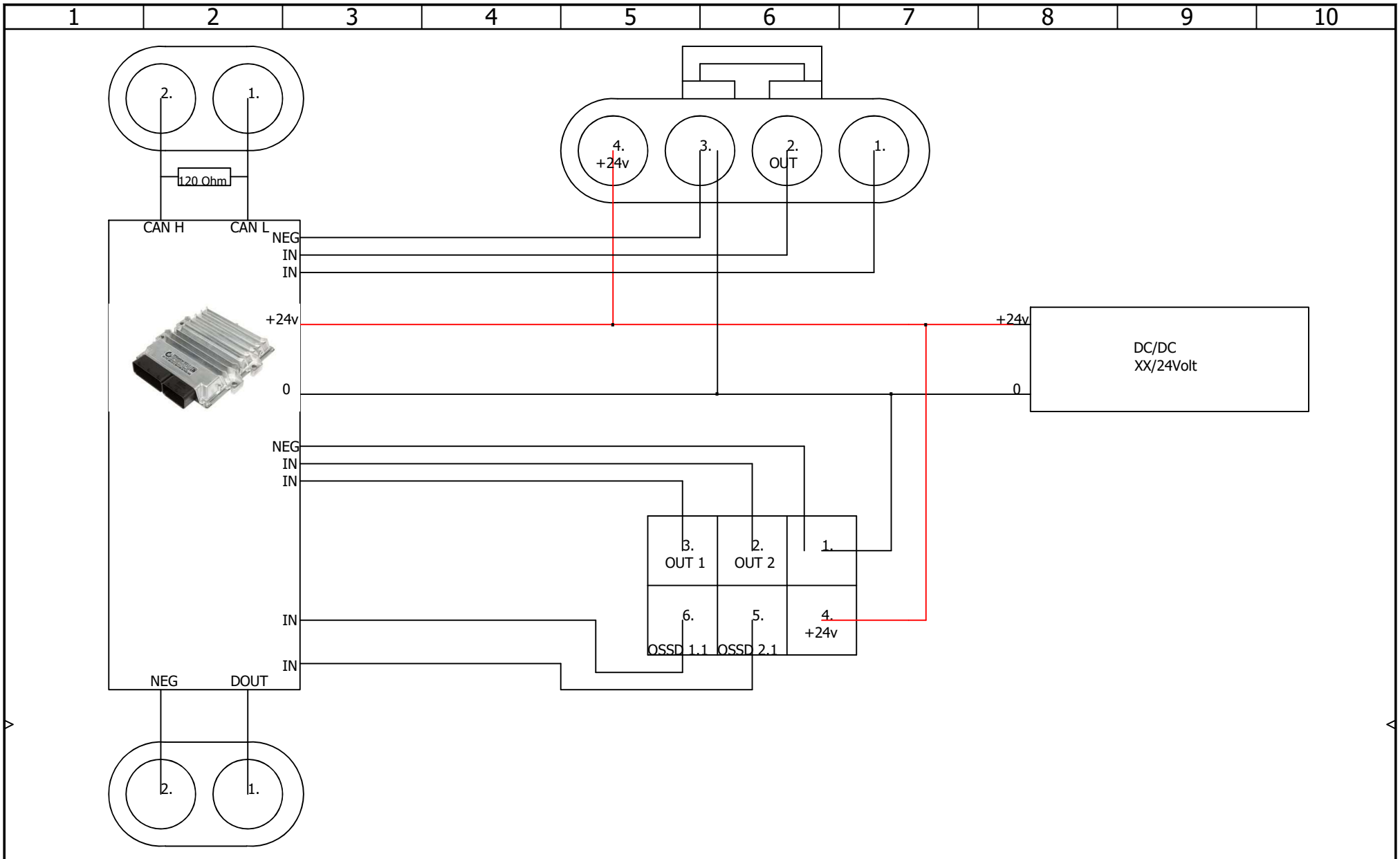

DesignSpark Electrical

Document book

REV.	DATE	NAME	CHANGES
0	31/03/2022	ricca	

REVISION 0

SCHEME 03

User data 1

User data 2

CONTRACT:

LOCATION: +L1 Main electrical closet

Document realized with version :2019.0.5.114

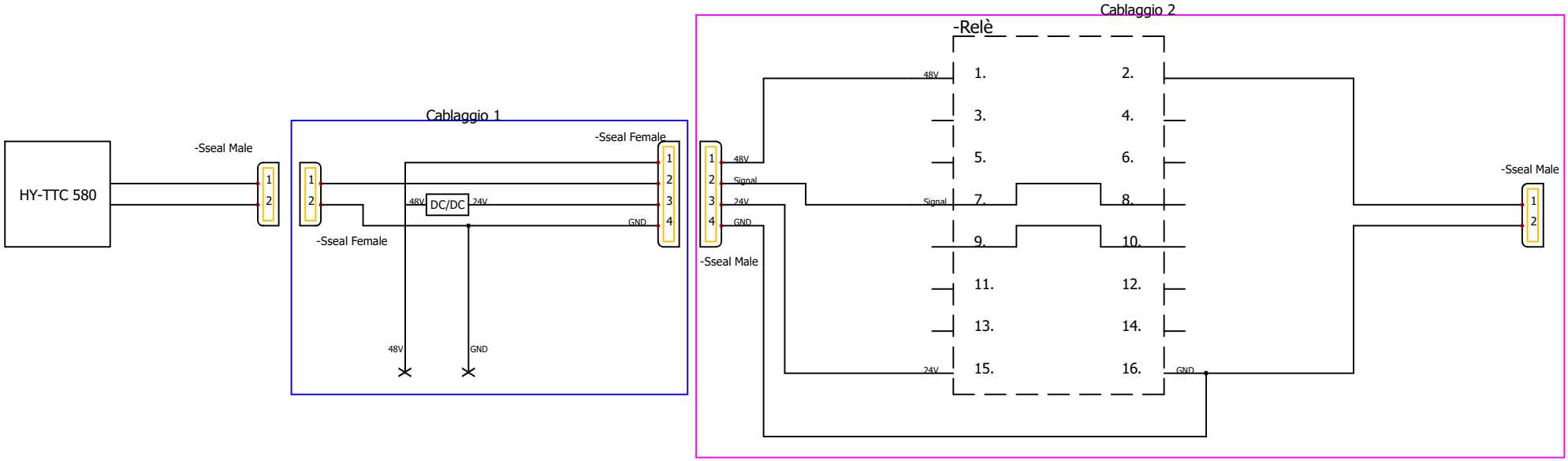

DesignSpark Electrical

Document book

REV.	DATE	NAME	CHANGES
0	29/04/2022	ricca	

REVISION 0

SCHEME 04

CONTRACT:

LOCATION: +L1 Main electrical closet

User data 1

User data 2

Document realized with version : 2019.0.5.114