OV13855 13MP product brief

13-Megapixel PureCel®Plus Sensor Brings High-End Imaging Capabilities to Mainstream Smartphones

lead free

available in a lead-free package

OmniVision's high performance OV13855 is a 13-megapixel PureCel®Plus image sensor designed to bring high-quality imaging to rear-facing camera applications in mainstream smartphones. It is also well-suited for front-facing and dual camera applications in high-end mobile devices. In addition to best-in-class pixel performance, this third generation 13-megapixel sensor also offers advanced features, such as phase detection autofocus (PDAF).

Built on OmniVision's PureCel®Plus pixel technology, the OV13855 delivers significant improvements in low-light performance, color crosstalk reduction, and angular response when compared with previous-generation 13-megapixel sensors. The OV13855 captures full-resolution 13-megapixel still images at 30 frames per second (fps) and records ultra-high resolution 4K2K video at 30 fps or 1080p full high definition (HD) at 60 fps.

The OV13855 fits in 8.5 x 8.5 mm autofocus modules with z-heights of less than 5 mm for rear cameras, and 7.5 x 7.5 mm fixed focus modules with z-heights of less than 4.5 mm for high-end front-facing cameras. The sensor is available in non-PDAF (OV13858) and monochrome (OV13355) versions for front-facing and dual camera applications.

Find out more at www.ovt.com.

OmniVision.

OV13855

Applications

- Smartphones and Feature Phones
- PC Multimedia
- Tablets
- Wearables

Ordering Information

- **OV13855-GA5A-2A**
  (color, chip probing, 150 µm backgrinding, reconstructed wafer)

Product Features

- 1.12 µm x 1.12 µm pixel
- optical size of 1/3.06"
- 33.15° CRA
- support for PDAF
- 13MP at 30 fps
- programmable controls for:
  - frame rate
  - mirror and flip
  - cropping
  - windowing
- supports images sizes:
  - 13MP (4224x3136)
  - 10MP (4224x2376)
  - 3MP (2112x1568), and more
- total embedded one-time programmable (OTP) memory: 1024 bytes, 416 bytes for customer use, remaining bytes for internal use
- support for output formats: 10-bit RGB RAW
- interlaced row HDR output
- two-wire serial bus control (SCCB)
- MIPI serial output interface (1-, 2-lane, or 4-lane)
- two on-chip phase lock loops (PLLs)
- 2x binning support
- image quality controls:
  - defect pixel correction
  - automatic black level calibration
  - lens shading correction
- built-in temperature sensor
- suitable for module size of 8.5 x 8.5 x <5 mm

Product Specifications

- **active array size:** 4256 x 3168
- **power supply:**
  - **analog:** 2.7 - 3.0V (2.8V nominal)
  - **core:** 1.14 - 1.26V (1.2V nominal)
  - **I/O:** 1.7 - 1.9V (1.8V nominal)
- **power requirements:**
  - **active:** 233 mW (based on ISP ON)
  - **standby:** 1 mW
  - **XSHUTDOWN:** <10 µA
- **temperature range:**
  - **operating:** -30°C to +85°C junction temperature
  - **stable image:** 0°C to +60°C junction temperature
- **output interfaces:** 4-lane MIPI serial output
- **output formats:** 10-bit RGB RAW
- **lens size:** 1/3.06"
- **input clock frequency:** 6 - 64 MHz
- **lens chief ray angle:** 33.15° non-linear
- **maximum image transfer rate:**
  - **13MP (4224x3136):** 30 fps
  - **10MP (4224x2376):** 30 fps
  - **3MP (2112x1568):** 60 fps
- **sensitivity:** 3900 e^-/Lux-sec
- **max S/N ratio:** 36.5 dB
- **dynamic range:** 65 dB @ 1x gain
- **minimum exposure:** 4-row
- **maximum exposure:** VTS-8
- **pixel size:** 1.12 µm x 1.12 µm
- **image area:** 4749.70 µm x 3535.49 µm
- **die dimensions:**
  - **COB:** 5868 µm x 4950 µm
  - **RW:** 5918 µm x 5000 µm

Functional Block Diagram

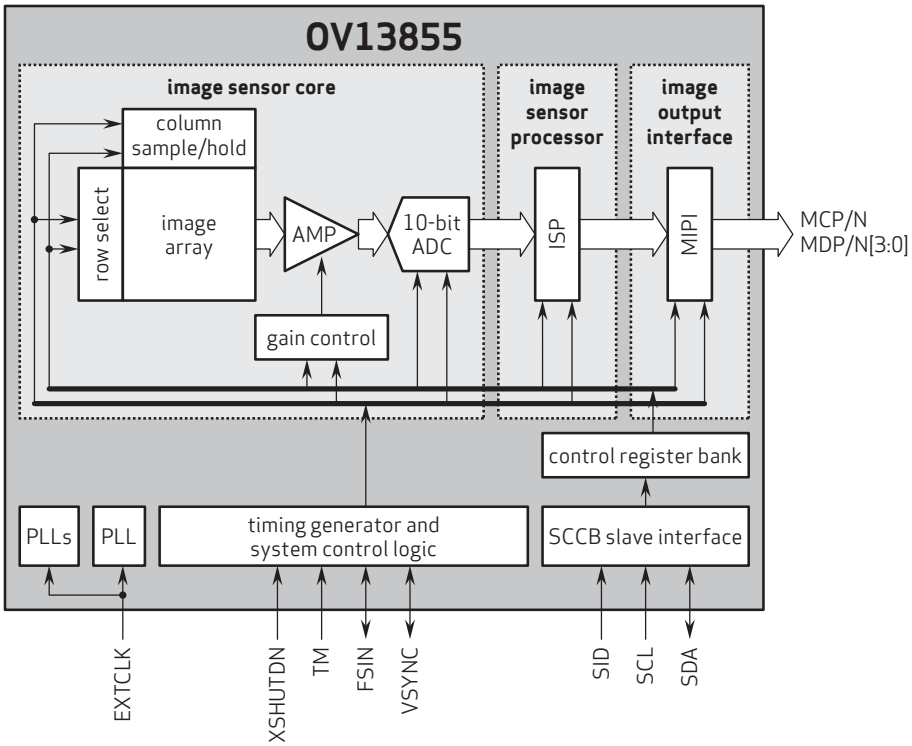

4275 Burton Drive
Santa Clara, CA 95054
USA

Tel: + 1 408 567 3000
Fax: + 1 408 567 3001
www.ovt.com

OmniVision reserves the right to make changes to their products or to discontinue any product or service without further notice. OmniVision, the OmniVision logo, and PureCel are registered trademarks of OmniVision Technologies, Inc. All other trademarks are the property of their respective owners.

Version 1.3, October 2018