Journal of Intelligent & Fuzzy Systems 42 (2022) 2181–2191
DOI:10.3233/JIFS-211507
IOS Press

A novel two-stage method of plant seedlings classification based on deep learning

Tianhong Dai[a], Shijie Cong[a], Jianping Huang[a], Yanwen Zhang[a], Xinwang Huang[a], Qiancheng Xie[a], Chunxue Sun[a] and Kexin Li[b,*]
[a]*Electromechanic Engineering College, Northeast Forestry University, Harbin, P.R. China*
[b]*School of Artificial Intelligence, Wuxi Vocational College of Science and Technology, Wuxi, P.R. China*

Abstract. In agricultural production, weed removal is an important part of crop cultivation, but inevitably, other plants compete with crops for nutrients. Only by identifying and removing weeds can the quality of the harvest be guaranteed. Therefore, the distinction between weeds and crops is particularly important. Recently, deep learning technology has also been applied to the field of botany, and achieved good results. Convolutional neural networks are widely used in deep learning because of their excellent classification effects. The purpose of this article is to find a new method of plant seedling classification. This method includes two stages: image segmentation and image classification. The first stage is to use the improved U-Net to segment the dataset, and the second stage is to use six classification networks to classify the seedlings of the segmented dataset. The dataset used for the experiment contained 12 different types of plants, namely, 3 crops and 9 weeds. The model was evaluated by the multi-class statistical analysis of accuracy, recall, precision, and F1-score. The results show that the two-stage classification method combining the improved U-Net segmentation network and the classification network was more conducive to the classification of plant seedlings, and the classification accuracy reaches 97.7%.

Keywords: Deep learning, plant seedlings classification, machine learning, U-Net

1. Introduction

In agricultural production, weed invasion is an unavoidable problem, and people use various methods to control weeds. So far, the main methods of removing weeds are physical, chemical and rational planting. Physical weeding means that people use machinery to artificially remove weeds, but the disadvantage of this method is that it requires the manual identification of weeds and crops. Chemical weeding is the use of pesticides and other chemicals to suppress weeds, but pesticides not only kill weeds, but also remain on the surface of crops, thus endangering people's health. Rational planting reduces the growth of weeds by reducing the open space through close planting. Planting cover crops between crops eliminates the space to prevent weeds from growing, and prevents light from entering weed seeds to inhibit their growth. However, this kind of planting method requires conducting a certain amount of research on agronomy, which is more difficult for farmers. Therefore, how to reduce artificial identification in the process of physical weeding is a problem, and the development of deep learning allows for seeking a solution. How to identify and remove weeds at the seedling stage of weeds and crops is a research direction.

Therefore, the classification of plant seedlings has always been a focus. Most researchers use the existing classification network model to classify plant seedlings. With the continuous development of deep learning technology, many excellent classification

*Corresponding author. Kexin Li, School of artificial intelligence, Wuxi Vocational College of Science and Technology, Wuxi, P.R. China. E-mail: dillonlkx@163.com.

ISSN 1064-1246/$35.00 © 2022 – IOS Press. All rights reserved.

network models have emerged. However, in the classification research of plant seedlings, the method of fine-tuning the existing classification network model is mostly used to improve the classification performance of plant seedlings.

In 2013, Zhao Zhang et al. proposed a plant leaf identification method based on PCA and SVM. After the segmentation and edge detection of a leaf image, 10 characteristic parameters of the leaf with rotation, scale, and translation invariance were extracted, principal component analysis was performed on these parameters, and the first three principal components were used as support vectors. The input of the machine establishes a pattern recognition model. The algorithm has an accuracy rate of 97.22% for the recognition of four plant leaves, namely, privet, papaya, five-cornered maple, and triangular maple [1]. At the same time, Jiao Ding et al. proposed a method based on weighted local linear embedding (WLLE) and support vector for the problem that the local linear embedding (LLE) algorithm is susceptible to noise and the nearest neighbor classifier cannot effectively identify plant leaves. In the support-vector machine (SVM) method of plant leaf identification, experimental data used 220 kinds of plants, a total of 16846 plant leaf images. Infant azulene leaves were selected as the positive samples, and an average accuracy rate of 98.16% was obtained [2].

In 2016, Mads Dyrmann et al. used a new CNN structure to classify species of plant seedlings. The author chose 2–10 days old plant seedlings, borrowing from the residual structure in resnet50, using the transfer learning method to obtain the initial parameters, and the average accuracy of the final classification was 86.2% [3].

In 2017, Thomas Mosgaard Giselsson et al. of the Signal Processing Group of Aarhus University and the University of Southern Denmark established a benchmark public image database of plant seedling classification algorithms, including 5539 images, divided into 12 species (3 crops and 9 kinds of weeds), image data were all captured at the early growth stage of seedlings. Their work provides a unified dataset for the classification of plant seedlings [4]. Therefore, in 2018, Trupti R. Chavan et al. established the AgroAVNET structure based on AlexNet (Krizhevsky et al., 2012) and VGGNET (Simonyan and Zisserman, 2014) to classify crops and weeds. This is a public dataset established by Thomas Mosgaard Giselsson et al. The average accuracy of the final classification of the AgroAVNET structure was 93.64% [5].

At the same time, the CNN developed by Heba A. Elnemr et al. is based on a hybrid model of AlexNet and VGG-Net. The normalization concept of the network was inspired by AlexNet, and the depth of the filter is selected on the basis of VGG-Net. Similarly, the author used a publicdataset created by Thomas Mosgaard Giselsson et al., with an average accuracy of classification of 94.38% [6].

In addition, Daniel Nkemelu et al. compared the effects of traditional algorithms and CNN on this dataset, and performed background removal. The traditional algorithms were KNN and SVM. After preprocessing the dataset for de-backgrounding, the final classification's average accuracy rates were 56.84% and 61.47% respectively. Using CNN to train on the dataset without background removal and without background removal, average accuracy rates of 80.21% and 92.60% were obtained [7].

Moreover, Seo Jeong Kim et al. used an onion field dataset for weed classification research. The author classified crops and weeds into two categories, and did not subdivide the weeds. The crops were only onions, and the CNN network was its own. The final average accuracy rate was 99% [8]. Shubo Wang et al. identified corn, peanuts, wheat and three kinds of weeds. The dataset used plants that the authors had photographed. With the author's own CNN network, the final average accuracy rate reached 95.6% [9].

After that, Belal A. M. Ashqar et al. used the VGG16 network to classify the public dataset of plant seedlings in 2019. The author performed feature extraction on the dataset, and on this basis, studied the impact on plant classification under the conditions of not changing the number of each type of dataset and using data enhancement to make the number of each type of dataset equal, obtaining 98.57 % accuracy [10]. Catherine R. Alimboyong et al. used AlexNet, VGG16, GoogLeNet, and ResNet networks to classify this public dataset. Each network used migration learning, and the final accuracy rate reached 90.5% [11].

Lastly, in 2020, Vo Hoang Trong et al. also used ResNet and VGG, and added network models such as NASNet, Inception–Resnet, and Mobilenet. They classified the public dataset of plant seedlings, and accuracy was 97.31% [12]. In order to classify plants and weeds, Nawmee Razia Rahman et al. used LeNet-5, VGG-16, DenseNet-121, and ResNet-50 to find the best-performing model, and obtained results of 96.21% [13]. In addition, Keshav Gupta et al. used ResNet50, VGG16, VGG19, Xception and MobileNetV2 to classify public datasets, and the

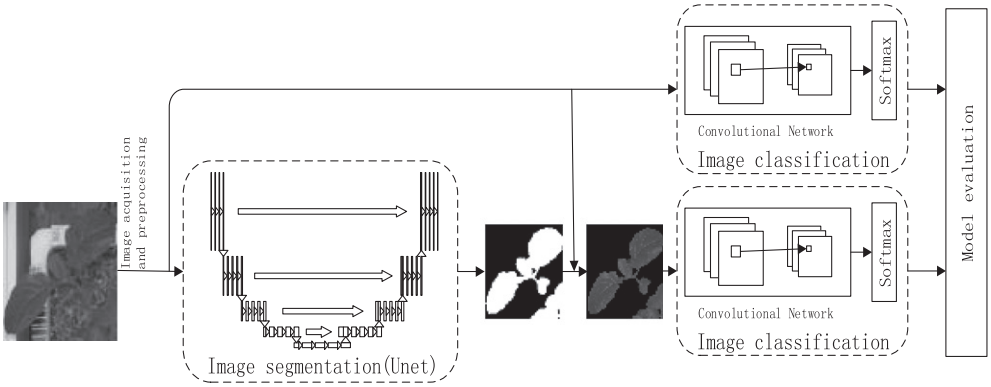

Fig. 1. The overall architecture of the deep learning method for plant seedlings.

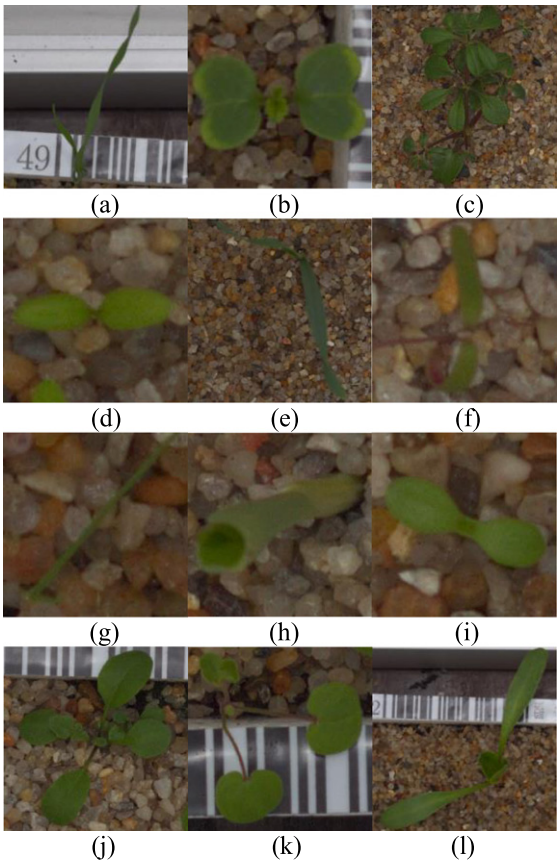

Fig. 2. Sample images. (a) black grass. (b) charlock. (c) cleavers. (d) common chickweed. (e) common wheat. (f) fat hen. (g) loose silky bent. (h) maize. (i) scentless mayweed. (j) shepherd purse. (k) small flowered cranesbill. (l) sugar beet.

best model was resnet50 with accuracy of 95.23% [14].

On the basis of the above-mentioned work, researchers aimed to improve or fine-tune a certain classification network in the classification of plant seedlings. The effect of using a classification network is not ideal. Therefore, this paper proposes a new method to improve seedling classification performance that combines the improved U-Net and other classification models, and was a two-stages: first, using the improved U-Net network to segment the target data, removing the background information, and then using the classification network to classify the seedlings.

The organizational structure of this article is as follows: Section 1 is the general overview of the method, including the U-Net and improved U-Net segmentation models, InceptionV3 and other classification models; Section outlines the experimental results; Section 3 compares the algorithm performance; Section 4 is the discussion; Section 5 is the conclusion.

2. Materials and methods

This section mainly details the classification methods of crops and weeds. This section is divided into four parts: image acquisition and preprocessing, image segmentation, image classification, and evaluation. The overall architecture is shown in Fig. 1. The image acquisition and preprocessing module unifies the format of the original dataset, unifying all pictures into 24-bit pictures, with a size of 512×512, which is the U-Net network input size. The image segmentation module performs three different operations on the dataset after the format is unified, that is, the improved U-Net network is used to segment the image data, and the original U-Net network is used to segment the image data without any processing. The image classification module uses three differently processed datasets to train the six networks

Table 1
Dataset details

Classes	Number of Training Images	Number of Testing Images
Black grass	259	50
Charlock	402	50
Cleavers	285	50
Common chickweed	662	50
Common wheat	203	50
Fat Hen	488	50
Loose silky bent	712	50
Maize	207	50
Scentless mayweed	557	50
Shepherd purse	224	50
Small flowered cranesbill	526	50
Sugar beet	412	50
Total	**4937**	**600**

(a) (b) (c) (d)

Fig. 3. (a) Original image. (b)Ground truth. (c) Image after Original U-net segmentation. (d) Image after improved U-net segmentation.

of InceptionV3, Resnet50, NASnet, MobilenetV2, Densenet121, and Se-Resnet50. The model evaluation module uses accuracy, recall, precision and F1-score to evaluate 18 results.

2.1. Image acquisition and preprocessing

The dataset for this experiment uses a public dataset that contains 5537 images of 12 kinds of plants, namely, 3 kinds of crops and 9 kinds of weeds, as shown in Fig. 2. According to the conclusions obtained by Sharada Prasanna Mohanty, we divided the dataset proportions into a 90% training set and a 10% test set [15], as shown in Table 1.

When preprocessing the image, since the resolution of the original image was different, we first unified the size of the image. Since the picture input size of the U-net network is 512×512 [16], in the preprocessing stage, we unified the picture resolution to 512×512. Next, we manually inspected the processed pictures, removed the damaged pictures, and converted the 32-bit pictures into 24-bit ones. The final number of obtained pictures was 5537.

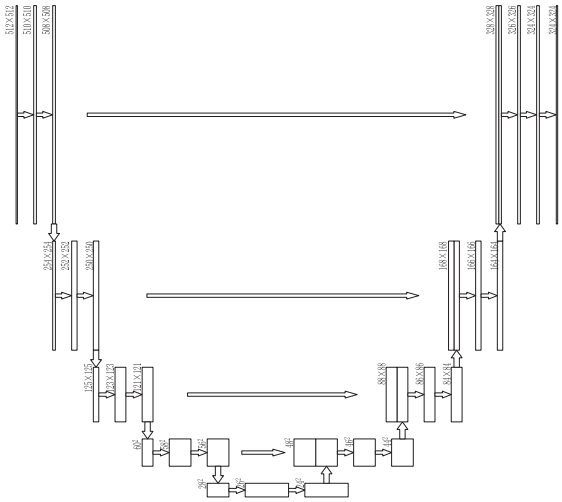

Fig. 4. U-net architecture.

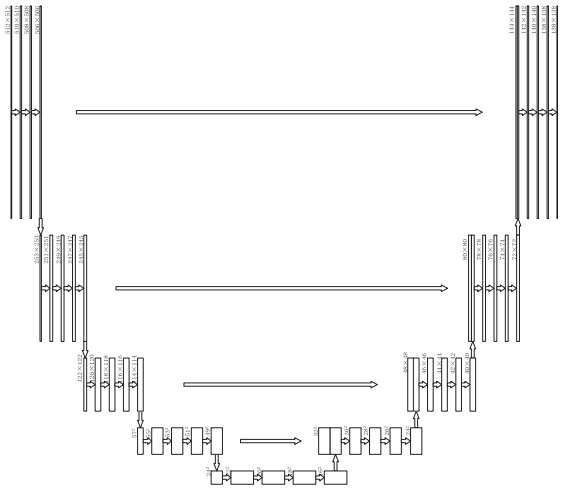

Fig. 5. Improved U-net architecture.

2.2. Image segmentation

Next, we performed three different processes on the dataset, and the picture after image segmentation is shown in Fig. 3. The first is not to perform any processing; the second is to use the original U-net to segment the dataset (with the BN layer added), and the network structure is shown in Fig. 4; the third is to use the improved U-net segmentation dataset, and the network structure is shown in Fig. 5. The purpose of data segmentation here is to remove image background interference and extract the seedling targets. Comparing Fig. 3, on the basis of the original U-net, whether it was down or up-sampling, at each scale, we

Table 2
Hyper-parameters of the experiments(U-net)

Hyper-Parameters	Value
Optimization algorithm	SGD
Momentum	0.8
learning rate	1×10^{-2}
Epochs	120
Batch size	4

Table 3
Summary of the utilized architectures

Network	Parameters (Millions)	Image Input Size
InceptionV3	23.9	299×299
Resnet50	25.6	224×224
Densenet121	8.1	224×224
Se-Resnet50	145.8	224×224
NASnet	5.3	224×224
MobilenetV2	3.5	224×224

Table 4
Hyper-parameters of the experiments

Hyper-parameters	Value
Optimization algorithm	Adam
learning rate	1.0×10^{-3}
Epochs	60
Batch size	6

increased the number of convolutional layers. For the first scale, we increased the number of convolutional layers to 3, and for the other scales, we increased the number of convolutional layers to 4, and added a BN layer after each convolutional layer.

We used the hyperparameters for the two U-nets, shown in Table 2.

2.3. Image classification

Next, we use three differently processed datasets to separately train the CNN model. In this experiment, we selected six representative CNN classification models for research. InceptionV3, Resnet50, NASnet, MobilenetV2, Densenet121 and Se-Resnet50 networks. The parameters are shown in Table 3.

According to the experimental control variable method, we set the same hyper-parameters for the six classification networks, as shown in Table 4.

We now briefly describe the characteristics of the six classification networks.

InceptionV3: the large convolutional block is decomposed into small convolutional blocks, the 7×7 convolutional block is decomposed into two

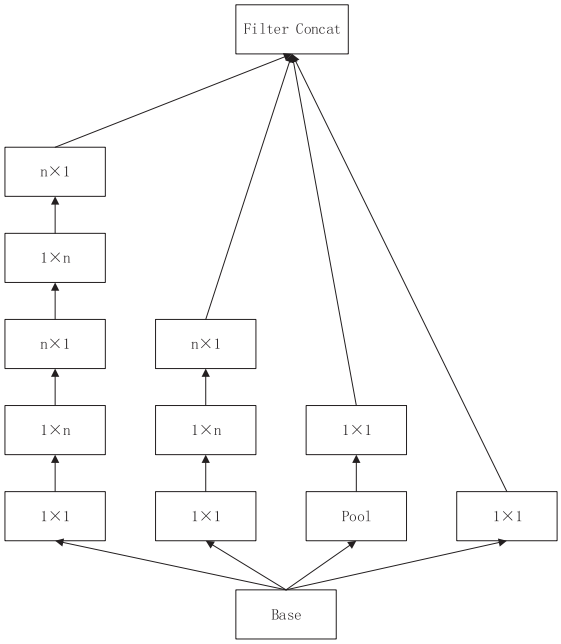

Fig. 6. InceptionV3 structure.

3×3 convolutional blocks, the 3×3 convolutional block is decomposed into 1×3 convolutional block and 3×1 convolutional block, and multiple convolutional blocks are used for parallel convolution. Then, channel dimensions are spliced to achieve the same effect as that when using a large convolutional block, and parameters are reduced; the structure is shown in Fig. 6 [17].

Resnet50: a 1×1 convolutional block is used for dimensionality reduction in the residual term, and features are extracted through a 3×3 convolutional block, and finally a 1×1 convolutional block is used for dimensionality increase. The identity of the previous layer is also mapped and added to the residual term to obtain the output. The structure is shown in Fig. 7 [18].

Densenet121: draws on the idea of the residual in Resnet50, and maps the output of each layer to the input of each subsequent layer. The structure is shown in Fig. 8 [19].

Se-Resnet50: Further improved on the basis of the residual structure in Resnet50, adding the squeeze and excitation blocks to make the network more nonlinear, better fit the complex correlation between channel performance, and greatly reduce the number of parameters and amount of calculations. Then, the normalized weight between 0 and 1 is obtained through a sigmoid gate, and a scale operation is used

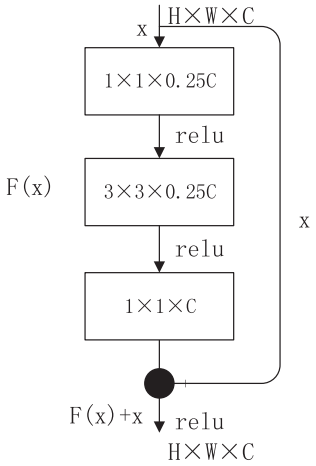

Fig. 7. Resnet50 structure.

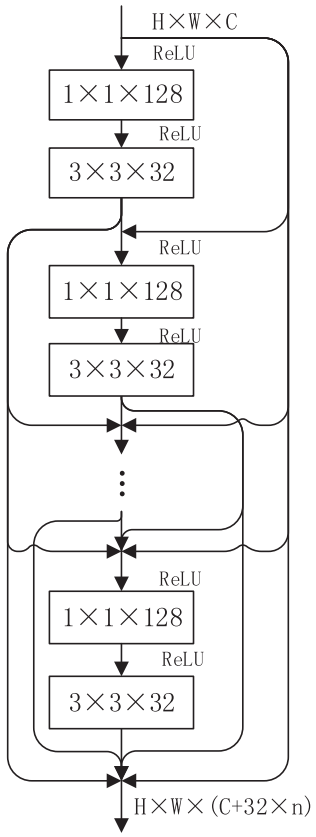

Fig. 8. Densenet121 structure.

to weigh the normalized weight to the features of each channel. The structure is shown in Fig. 9 [20].

NASnet: Automatically trained using AutoML. The model performs a neural network architecture

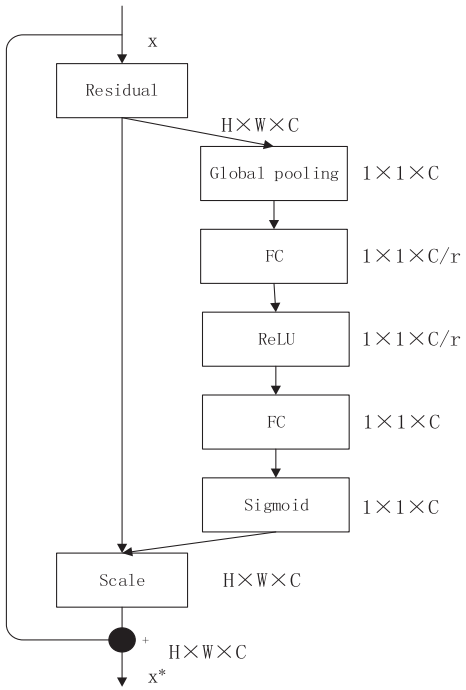

Fig. 9. Se-resnet50 structure.

search on the dataset so that AutoML can find the best layer, flexibly stack multiple times to create the final network, and transfer the best learned architecture to image classification [21].

MobilenetV2: Its structure is similar to that of Resnet50, but unlike Resnet50, MobilenetV2 first performs dimensionality increase processing on the input, performs deep convolution (DW) on the dimensionality increase output, and then performs dimensionality reduction processing, that is, reverses the residual; the structure is shown in Fig. 10 [22].

2.4. Evaluation

In this section, we used general multi-category evaluation indicators, namely, accuracy, recall, precision, and F1-score. These indicators are calculated by basic indicators, which are true positive(TP), false positive(FP), true negative(TN) and false negative(FN). TP predicts a positive class as a positive class, FP predicts a negative class as a positive class, TN predicts a negative class as a negative class, and FN predicts a positive class as a negative class.

Accuracy: The probability that the prediction is correct in the total sample. We used both the Top1

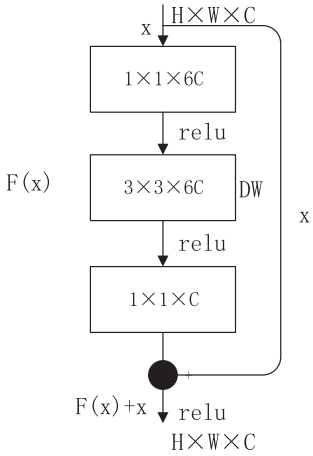

Fig. 10. MobilenetV2 structure.

and Top2 accuracy rates.

$$accuracy = \frac{TP + TN}{TP + TN + FP + FN}$$

Recall: The ratio of the number of retrieved related documents to the number of all related documents in the document library. It is also called recall rate or true rate.

$$recall = \frac{TP}{TP + FN}$$

Precision: describes the rate at which the prediction is correct when the prediction result is positive.

$$precision = \frac{TP}{TP + FP}$$

F1-score: the harmonic function of precision and recall.

$$F1 - score = 2 \times \frac{precision \times recall}{precision + recall}$$

3. Results

Because many calculations are required to train CNNs, all experiments were performed on a deep learning workstation. The workstation configuration is shown in Table 5. The training process was carried out in the PyTorch environment, and the programming language used Python 3.6.

In this experiment, we evaluated the accuracy, recall rate, precision rate, and F1-score of six CNN networks. The experiment results are shown in Table 6.

Table 5
Machine specifications

Hardware and Software	Characteristics
Memory	64Gb
Processor	Intel Core i7-10700k CPU @ 3.80 GHz
Graphics	GeForce RTX 2070 Super 8 Gb

All models showed similar and significant statistical performance. In all classification networks that used the improved U-net model to segment the dataset, the Top2 accuracy showed that the result of InceptionV3 was the best, reaching 97.7%. This was followed by Densenet121 and Resnet50, reaching 96.7% and 96.5%. The bottom three were MobilenetV2, Nasnet and Seresnet50, with Top2 accuracy rates of 94%, 92.7% and 92.2% respectively. In the classification network of all the datasets segmented by the original U-net model, the top three were Densenet121, Resnet50 and InceptionV3, and the bottom three were Nasnet, MobilenetV2 and Seresnet50. In all classification networks that were not segmented, the top three were still Resnet50, InceptionV3 and Densenet121, and the bottom three were still Nasnet, Seresnet50 and MobilenetV2.

On the other hand, the table shows that in each classification network, the Top2 accuracy of the classification network of the dataset segmented by the improved U-net is better than the classification of the dataset segmented by the original U-net. The network was better than the classification network of the undivided dataset. Moreover, the use of the U-net model for segmentation had different lifting effects on each classification network. In the four networks of Seresnet50, InceptionV3, Densenet121 and MobilenetV2, the improvement effect could reach about 3%. In Resnet50 and Nasnet, an increase of about 1% could also be achieved.

In addition, Table 7 shows the confusion matrix of the model based on performance metrics and the best results. On the basis of the results, the performance of the classifier could be intuitively evaluated, and the InceptionV3 model neurons using the improved U-net segmentation dataset could be used to determine which classes were highlighted. Rows are related to the output class, and columns are related to the true class. Diagonal cells are associated with correctly classified observations, and off-diagonal cells correspond to misclassified observations.

It is obvious from the confusion matrix in Table 7 that there were many misjudgments between black

Table 6
Performance measures (%) for every model

Performance Measures	Top1 Accuracy	Top2 Accuracy	recall	precision	F1-score	Time(s)
InceptionV3	84.5	94.3	86.1	84.5	83.5	157
*InceptionV3	86.7	95.0	87.6	86.7	86.8	157
****InceptionV3**	**88.7**	**97.7**	**88.8**	**88.7**	**88.6**	**157**
Resnet50	86.3	95.2	86.5	86.3	86.1	157
*Resnet50	87.3	96.2	88.0	87.3	86.7	157
**Resnet50	83.2	96.5	84.0	83.2	82.4	157
Densenet121	80.0	92.8	82.2	80.0	84.7	190
*Densenet121	89.2	96.3	89.6	89.2	89.1	190
**Densenet121	88.7	96.7	90.1	88.7	88.4	190
Seresnet50	65.5	87.5	72.0	65.5	64.0	163
*Seresnet50	71.3	88.8	75.8	71.3	70.6	163
**Seresnet50	78.3	92.2	79.1	78.3	78.0	163
Nasnet	80.3	90.5	83.8	80.3	80.1	318
*Nasnet	78.8	91.7	79.8	78.8	78.0	318
**Nasnet	82.5	92.7	82.6	82.5	81.9	318
MobilenetV2	69.8	86.8	79.5	69.8	69.3	91
*MobilenetV2	74.5	89.8	78.0	74.5	73.8	91
**MobilenetV2	83.7	94.0	85.5	83.7	83.7	91

* Original U-net model segmentation, ** Improved U-net model segmentation.

Table 7
Confusion matrix based on InceptionV3 model. (1) black grass. (2) charlock. (3) cleavers. (4) common chickweed. (5) common wheat. (6) fat hen. (7) loose silky bent. (8) maize. (9) scentless mayweed. (10) shepherd purse. (11) small flowered cranesbill. (12) sugar beet

	1	2	3	4	5	6	7	8	9	10	11	12
1	**29**	1	0	0	2	0	11	0	0	0	0	0
2	0	**44**	0	0	0	0	0	0	1	0	1	0
3	0	4	**47**	0	1	0	0	0	1	0	0	0
4	0	0	0	**49**	0	0	0	0	2	1	0	1
5	2	0	0	0	**44**	1	0	1	1	0	0	0
6	0	0	0	0	0	**49**	0	1	0	0	0	1
7	19	0	0	0	1	0	**39**	0	0	0	0	0
8	0	0	0	0	0	0	0	**47**	0	0	0	1
9	0	0	0	0	0	0	0	0	**45**	3	0	3
10	0	0	0	1	0	0	0	0	0	**46**	0	0
11	0	1	2	0	0	0	0	0	0	0	**49**	0
12	0	0	1	0	2	0	0	1	0	0	0	**44**

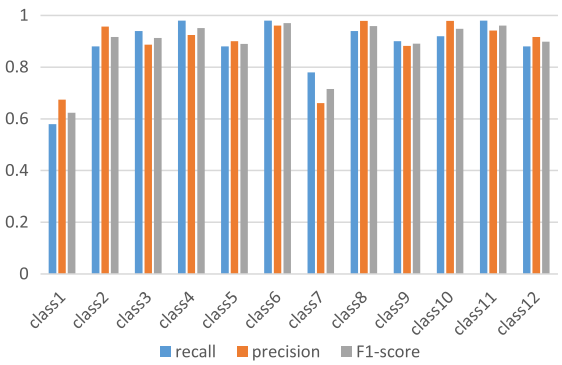

Fig. 11. Performance results for each class.

grass and loose silky bent. It recognized 19 pictures of black grass as loose silky bent, 11 pictures of loose silky bent were recognized as black grass, and the recognition accuracy of other types of plants was higher. In addition, we calculated the classification performance metric for each category, and the result of using the segmented InceptionV3 model is shown in Fig. 11.

In addition, we compared the results with the work of other authors, as shown in Table 8, and our proposed method improved the performance of CNN to obtain better results.

4. Discussion

The development of deep learning technology allows for using digital images to classify crops and weeds. When weeds are still in the seedling stage, we could establish a fast and accurate classification model to screen the weeds. The dataset that we used in this study was 3 crops and 9 weeds, with a total of 5519 pictures. We divided the dataset according to the ratio of 9:1, and performed three different segmentation operations on the training set. After training the six typical CNN classification models of Seresnet50, InceptionV3, Densenet121, Resnet50, Nasnet, and MobilenetV2, 18 classification results were obtained.

Among the six typical CNN models, the small networks Nasnet and MobilenetV2 showed poor Top2 accuracy on the three segmented datasets because

Table 8
Summary of techniques and comparison between studies for classification of plant diseases

Author and Year	Number of Classes	Number of Images	CNN Architecture	Measures	Accuracy
Zhao Zhang et al. (2013)	4	232	PCA SVM	Accuracy	97.22%
Jiao Ding et al. (2013)	220	16846	WLLE SVM	Accuracy	98.16%
Mads Dyrmann et al. (2016)	22	10413	Customized	Accuracy	86.20%
Trupti R. Chavan et al. (2018)	12	5544	Customized	Accuracy Precision Recall F1-score	93.64%
Heba A. Elnemr et al. (2018)	12	5539	Customized	Accuracy Precision Recall F1-score	94.38%
Daniel Nkemelu et al. (2018)	12	4275	KNN SVM Customized	Accuracy	92.60%
Seo Jeong Kim et al. (2018)	2	4586	Customized	Precision Recall F1-score	99.00%
Shubo Wang et al. (2018)	6	17865	Customized	Accuracy	95.60%
Belal A. M. Ashqar et al. (2019)	12	5608	VGG16	Accuracy	98.57%
Catherine R. Alimboyong et al. (2019)	12	4234	AlexNet VGG16 GoogleNet ResNet50	Accuracy	90.50%
Vo Hoang Trong et al. (2020)	12	5539	VGG16 ResNet50 Inception-ResNet MobileNet NASNet	Accuracy Precision Recall F1-score	97.31%
Nawmee Razia Rahman et al. (2020)	12	5539	LeNet-5 VGG16 ResNet50 DenseNet121	Accuracy Precision Recall F1-score	96.21%
Keshav Gupta et al. (2020)	12	5539	VGG16 VGG19 ResNet50 Xception MobileNetV2	Accuracy Precision Recall F1-score	95.23%
Our method	**12**	**5537**	**Unet+InceptionV3**	**Accuracy** **Precision** **Recall** **F1-score**	**97.70%**

of fewer parameters. Seresnet50, which had the largest parameter, had too many useless parameters on the three segmented datasets, resulting in a decrease in accuracy. In InceptionV3, Densenet121, and Resnet50, the parameters of InceptionV3 and Resnet50 were relatively close, and were significantly more than the parameters of Densenet121 were. However, in terms of Top2 accuracy, the values of InceptionV3, Resnet50 and Densenet121 were relatively close. This shows that, in the classification of plant seedlings, a model with appropriate parameters can achieve a better classification effect. When the two U-net models were introduced for segmentation, the accuracy of each classification network was significantly improved, and the Top2 accuracy increased from 1% to 4%. This shows that, if the U-net model is used to perform image processing, segmentation can improve the performance of the classification network. Moreover, using the improved U-net model for segmentation combined with the InceptionV3 classification network can achieve a Top2 accuracy rate of 97.7%.

All of the above classification models use different metrics to evaluate, including accuracy, recall,

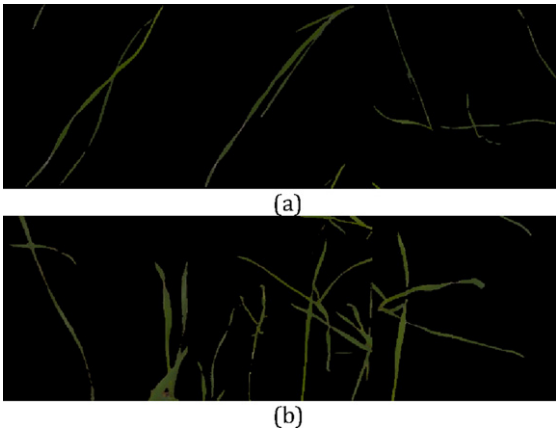

Fig. 12. Test image. (a) Black Grass. (b) Loose Silky Bent.

precision, and F1-score, and they all use the same hyperparameters. Table 6 shows that using the U-net segmentation model for segmentation with the InceptionV3 network model achieved better results than those of other combined models. Table 7 shows the confusion matrix of the classification results of the hybrid model using the improved U-net combined with InceptionV3. The confusion matrix showed that, since black grass and loose silky bent are very similar, the hybrid model had a high error rate in identifying them. As shown in Fig. 12, since these two types of plants are very similar in appearance, they cannot be distinguished by the naked eye. Therefore, the confusion matrix also showed that the classification network could not distinguish between black grass and loose silky bent. Since there were only 12 classified plant seedlings, if Top5 accuracy is used, even better results can be obtained, but the ability to distinguish crops is reduced. Moreover, in practical applications, these two types of plants are weeds, and failure to discriminate the seedlings of these two weeds does not affect the removal of weeds, so we used the Top2 accuracy rate as the evaluation standard of the CNN model.

On the other hand, this work has some limitations. We did not produce a more detailed distinction between black grass and loose silky bent in order to achieve more precise results, and the U-net model that is often used when processing medical images was used in the experiment for segmentation. This requires operators to understand the content of image segmentation and classification, which is not conducive to users or farmers with little or no professional knowledge.

5. Conclusions

This paper proposed a two-stage plant seedling classification method based on deep learning. We used the three processing methods of the improved U-Net, the original U-Net, and no segmentation for the dataset, and the six classification models of Seresnet50, InceptionV3, Densenet121, Resnet50, Nasnet, and MobilenetV2 for verification. Through experiments, after using the improved U-Net for image segmentation, better classification performance were achieved. Although each model used in this work could be classified from 3 crop seedlings and 9 weed seedlings, the improved U-Net combined with the InceptionV3 classification model proposed in this paper could achieve a Top2 accuracy rate of 97.7%. Its classification performance was the best, which is of great significance for the classification of plant seedlings.

References

[1] Z. Zhang, M. Yang and D. He, Research on Plant Leaf Classification Method Based on PCA and SVM, *Agricultural Mechanization Research* (2013), 34–37.

[2] J. Ding, D. Liang and Q. Yan, Image recognition method of plant leaves based on WLLE and SVM, *Journal of Anhui University (Self Science Edition)* (2013), 61–67.

[3] M. Dyrmann, H. Karstoft and H.S. Midtiby, Plant species classification using deep convolutional neural network, *Biosystems Engineering* (2016), 151.

[4] T.M. Giselsson, R. Jørgensen, P.K. Jensen, M. Dyrmann and H.S. Midtiby, A Public Image Database for Benchmark of Plant Seedling Classification Algorithms. 2017.

[5] T.R. Chavan and A.V. Nandedkar, AgroAVNET for crops and weeds classification: A step forward in automatic farming, *Computers and Electronics in Agriculture* (2018), 154.

[6] H.A. Elnemr, Convolutional Neural Network Architecture for Plant Seedling Classification, *International Journal of Advanced Computer Science and Applications (IJACSA)* (2019), 10.

[7] D. Nkemelu, D. Omeiza and N. Lubalo, Deep Convolutional Neural Network for Plant Seedlings Classification. 2018.

[8] K.S. Jeong, L.J. Su and K.H. Suk, Deep learning-based Automatic Weed Detection on Onion Field, *Smart Media Journal* (2018), 7.

[9] S. Wang, H. Liu, Y. Han, J. Chen, Y. Pan, Y. Cao, H. Meng and Y. Zheng, Low-Altitude Remote Sensing Based on Convolutional Neural Network for Weed Classification in Ecological Irrigation Area, *IFAC PapersOnLine* (2018), 51.

[10] B.A.M. Ashqar, B.S. Abu-Nasser and S.S. Abu-Naser, Plant Seedlings Classification Using Deep Learning, *International Journal of Academic Information Systems Research* (2019), 7–14.

[11] C.R. Alimboyong and A.A. Hernandez, An Improved Deep Neural Network for Classification of Plant Seedling Images.

In *Proceedings of 2019 IEEE 15th International Colloquium on Signal Processing & Its Applications (CSPA)*.

[12] V.H. Trong, G.H. Yu, T.V. Dang and K. Jin-Young, Late fusion of multimodal deep neural networks for weeds classification, *Computers and Electronics in Agriculture* **175** (2020), 105506.

[13] N.R. Rahman, M. Hasan and J. Shin, Performance Comparison of Different Convolutional Neural Network Architectures for Plant Seedling Classification. In *Proceedings of 2020 2nd International Conference on Advanced Information and Communication Technology (ICAICT)*.

[14] K. Gupta, R. Rani and N.K. Bahia, Plant-Seedling Classification Using Transfer Learning-Based Deep Convolutional Neural Networks, *International Journal of Agricultural and Environmental Information Systems (IJAEIS)* (2020), 11.

[15] S.P. Mohanty, D.P. Hughes and M. Salathe, Using Deep Learning for Image-Based Plant Disease Detection, *Frontiers in Plant Science* (2016), 7.

[16] O. Ronneberger, P. Fischer and T. Brox, U-Net: Convolutional Networks for Biomedical Image Segmentation, *International Conference on Medical Image Computing and Computer-Assisted Intervention* 2015.

[17] C. Szegedy, V. Vanhoucke, S. Ioffe, J. Shlens and Z. Wojna, Rethinking the Inception Architecture for Computer Vision, *IEEE* (2016), 2818–2826.

[18] K. He, X. Zhang, S. Ren and J. Sun, Deep Residual Learning for Image Recognition, *IEEE* 2016.

[19] G. Huang, Z. Liu, V. Laurens and K.Q. Weinberger, Densely Connected Convolutional Networks. In *Proceedings of IEEE Computer Society*.

[20] H. Jie, S. Li, S. Gang and S. Albanie, Squeeze-and-Excitation Networks, *IEEE Transactions on Pattern Analysis and Machine Intelligence* (2017), PP.

[21] B. Zoph, V. Vasudevan, J. Shlens and Q.V. Le, Learning Transferable Architectures for Scalable Image Recognition. 2017.

[22] M. Sandler, A. Howard, M. Zhu, A. Zhmoginov and L.C. Chen, Inverted Residuals and Linear Bottlenecks: Mobile Networks for Classification, *Detection and Segmentation*. 2018.