ANALOG

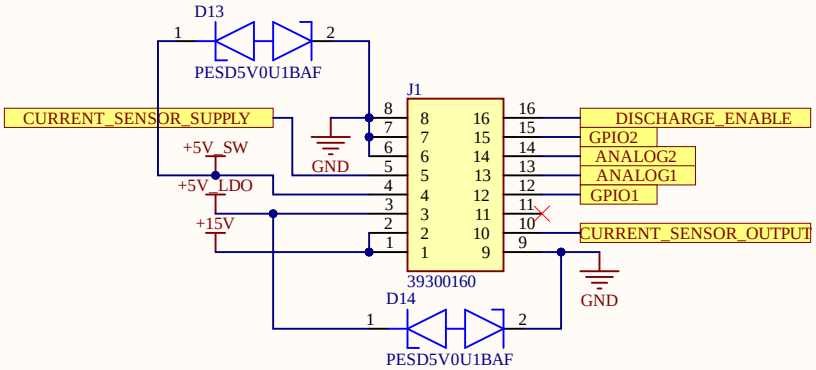

ISOSPI

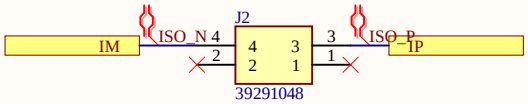

SHUTDOWN

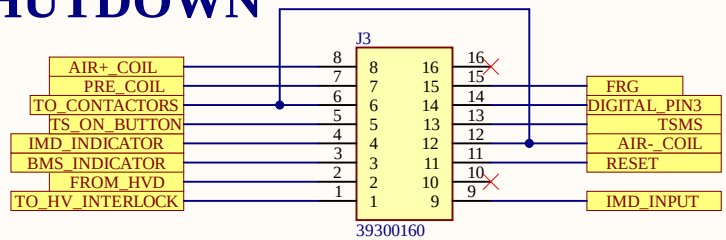

CAN

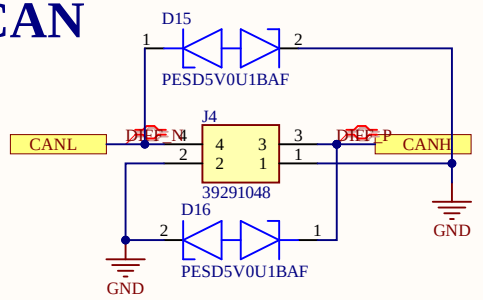

FTDI

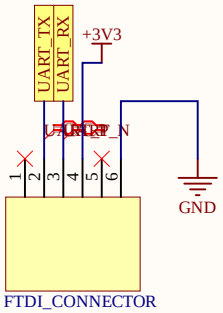

SD CARD

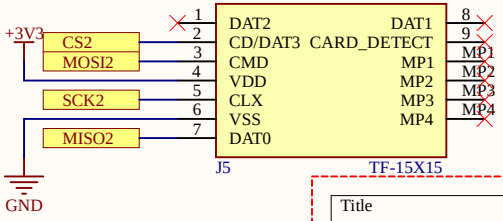

Title		
Size: A4	Number	Revision
Date: 5-24-2022		Sheet of
File: E:\TKR\..\CONNECTORS.SchDoc		Drawn By:

STM32_BLUEPILL

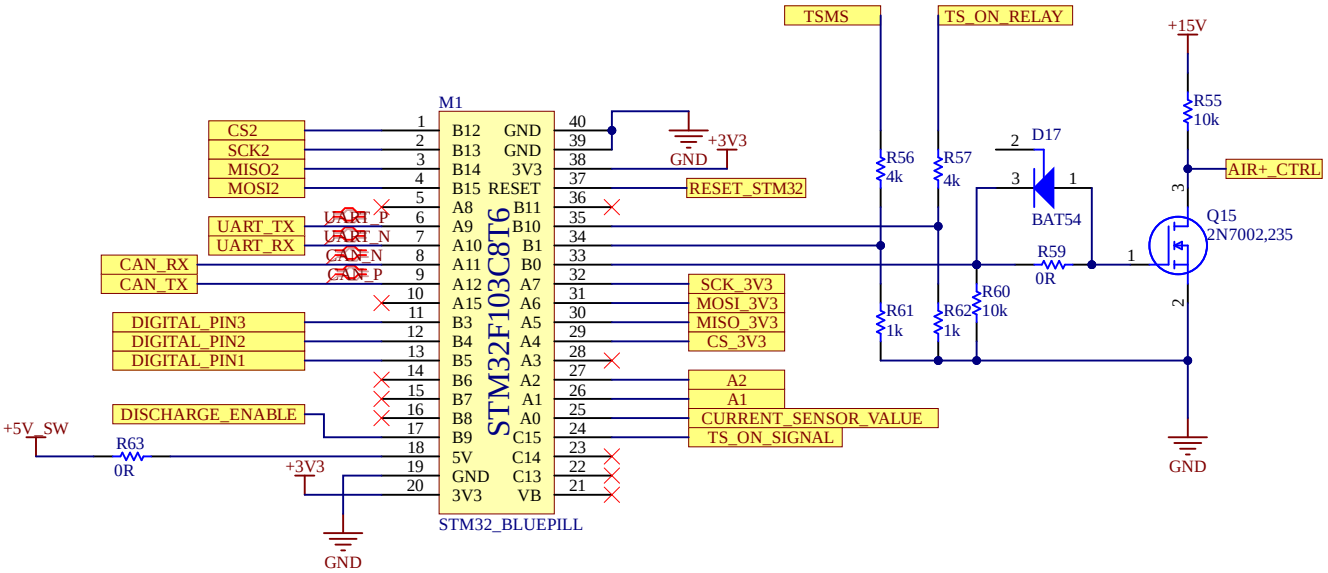

FILTERS

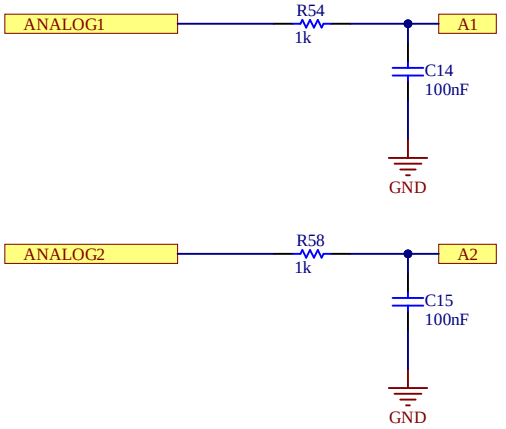

CAN_TRANSCEIVER

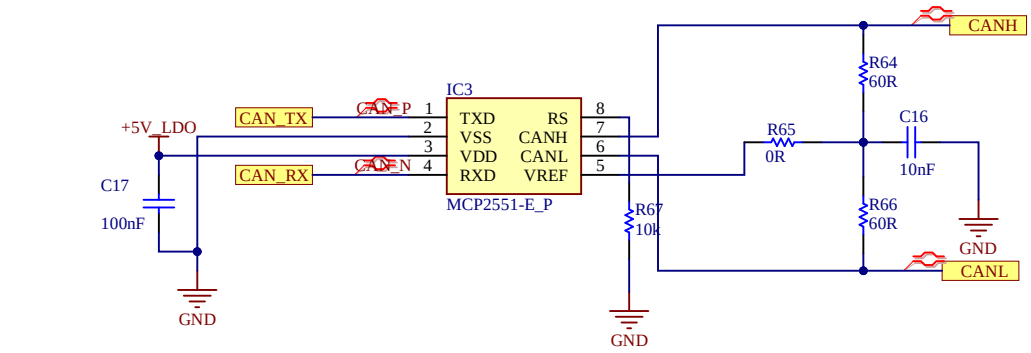

Title		
Size: A4	Number	Revision
Date: 5-24-2022		Sheet of
File: E:\TKR\..\CONTROL_AND_COMMUNICATION.SchDoc		Drawn By:

LEVEL SHIFTER

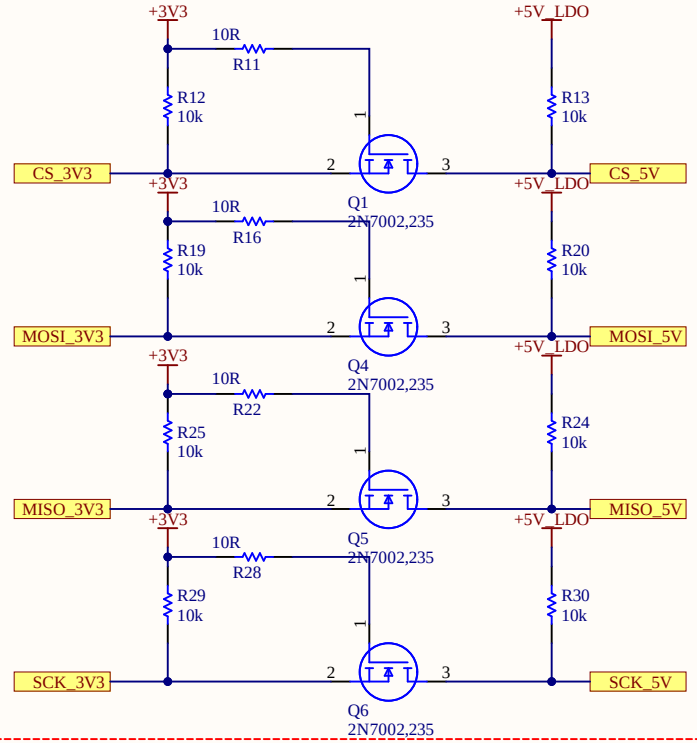

REDUNDANT CIRCUITS

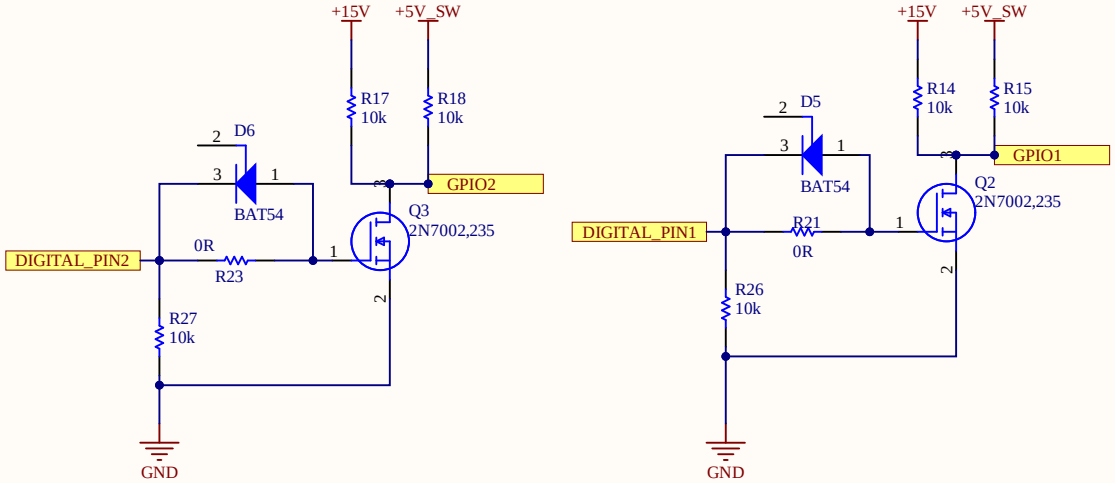

ISOLATOR

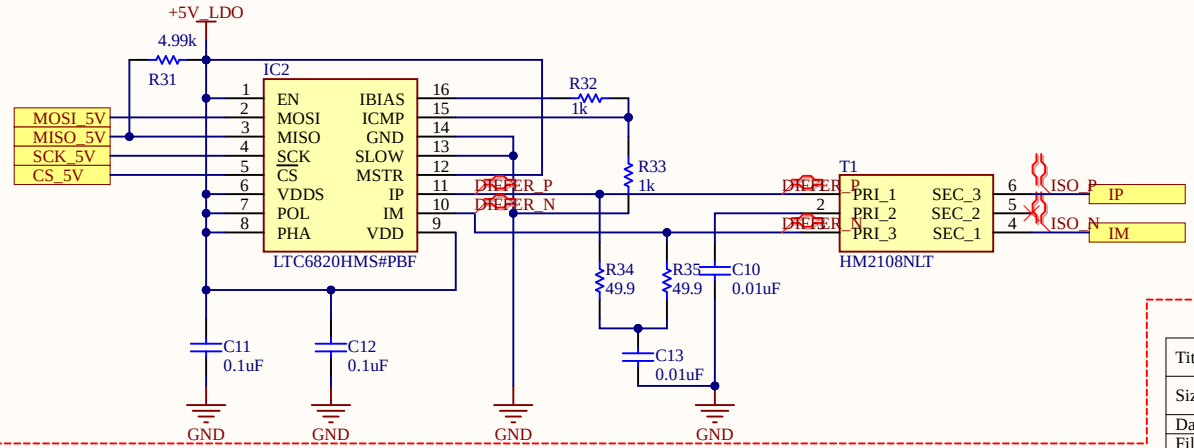

Title *			
Size: A4	Number:*	Revision:*	
Date: 24-05-2022	Time: 19:39:54	Sheet * of *	
File: E:\TKR\Documents\BMS\BMS_MASTER_REV1\ISOLATOR_LEVEL SHIFTER.SchDoc			

IMD & BMS LATCH

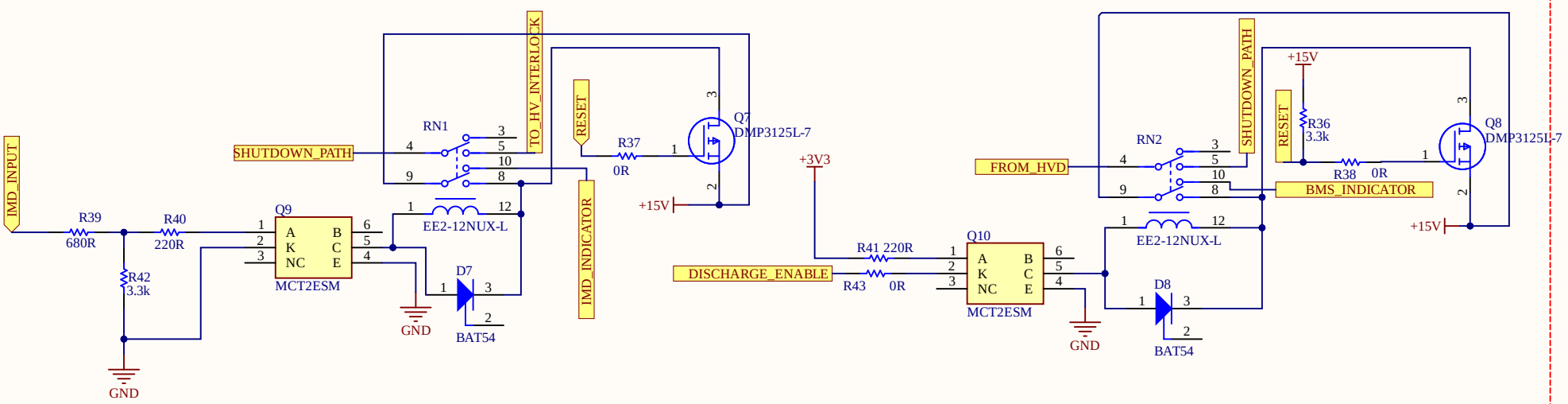

TS ON & PRECHARGE CONTROL

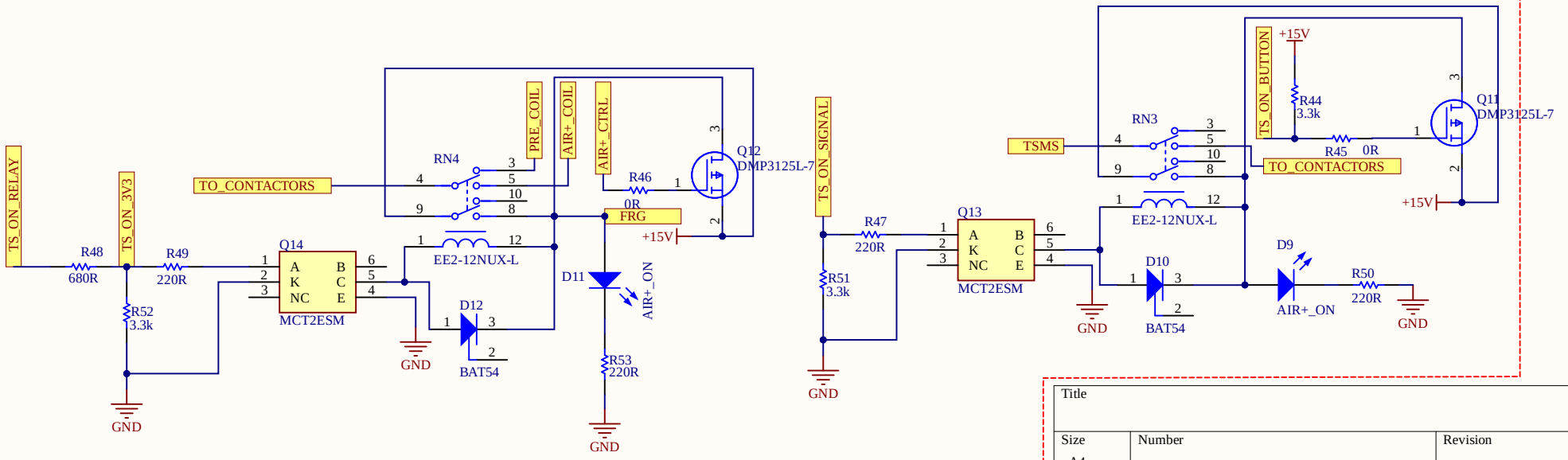

Title		
Size A4	Number	Revision
Date: 5-24-2022		Sheet of
File: E:\TKR\..\LATCHING_CIRCUITS.SchDoc		Drawn By:

SWITCHING REGULATOR

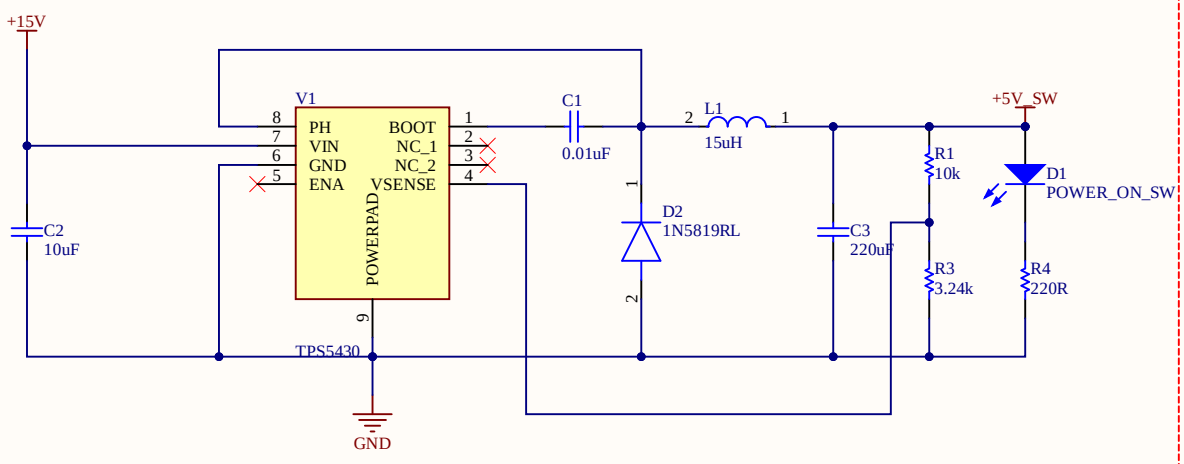

STM32 RESET

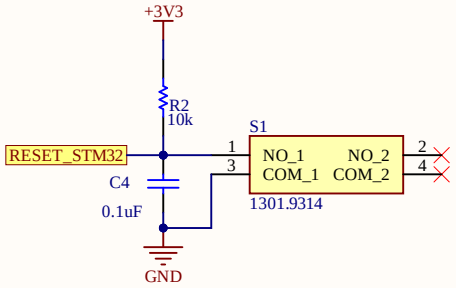

LINEAR REGULATOR

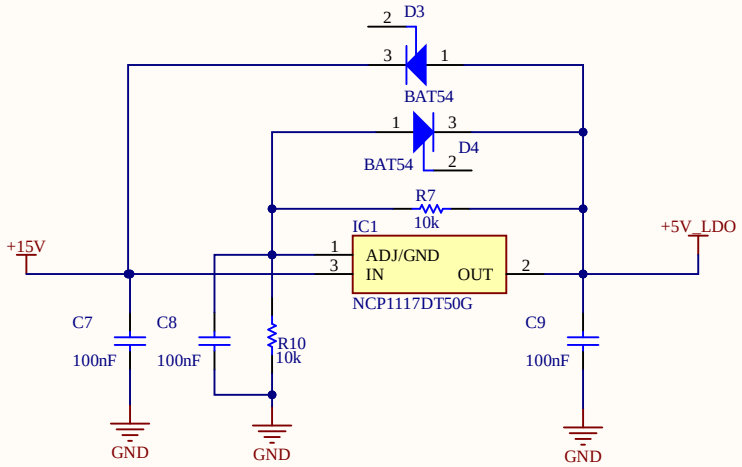

CURRENT SENSOR SUPPLY

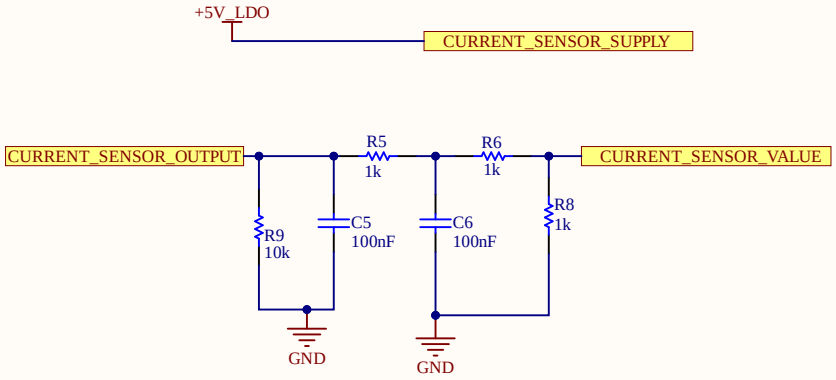

Title		
Size A4	Number	Revision
Date: 5-24-2022		Sheet of
File: E:\TKR\..\POWERSTAGE.SchDoc		Drawn By:

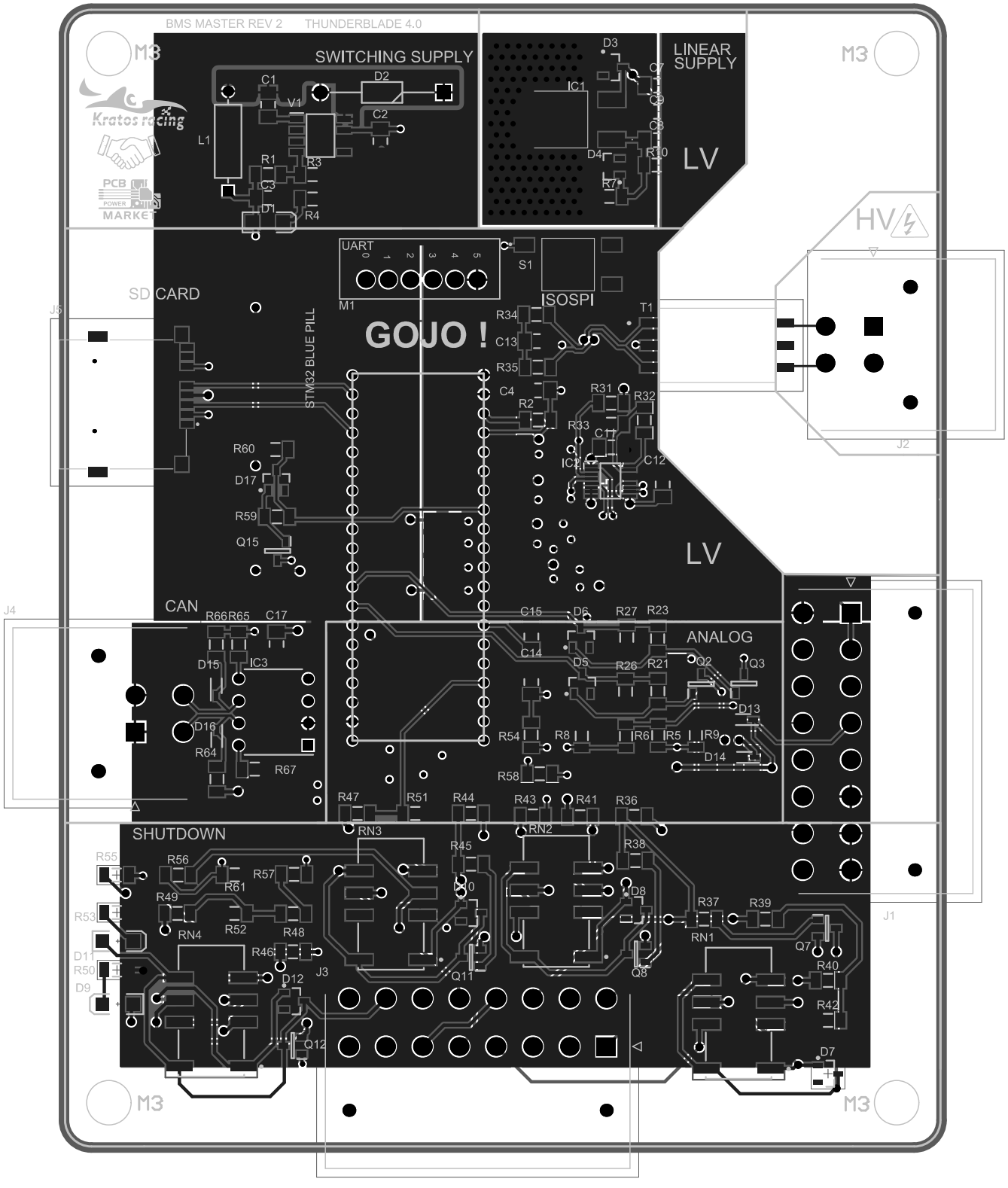
BMS MASTER REV 2
THUNDERBLADE 4.0
SWITCHING SUPPLY
LINEAR SUPPLY
LV
HV
SD CARD
UART
ISOSPI
GOJO !
STM32 BLUE PILL
CAN
ANALOG
SHUTDOWN
M3
J1
J2
J3
J4
J5
Kratos racing
PCB POWER MARKET

Board Stack Report