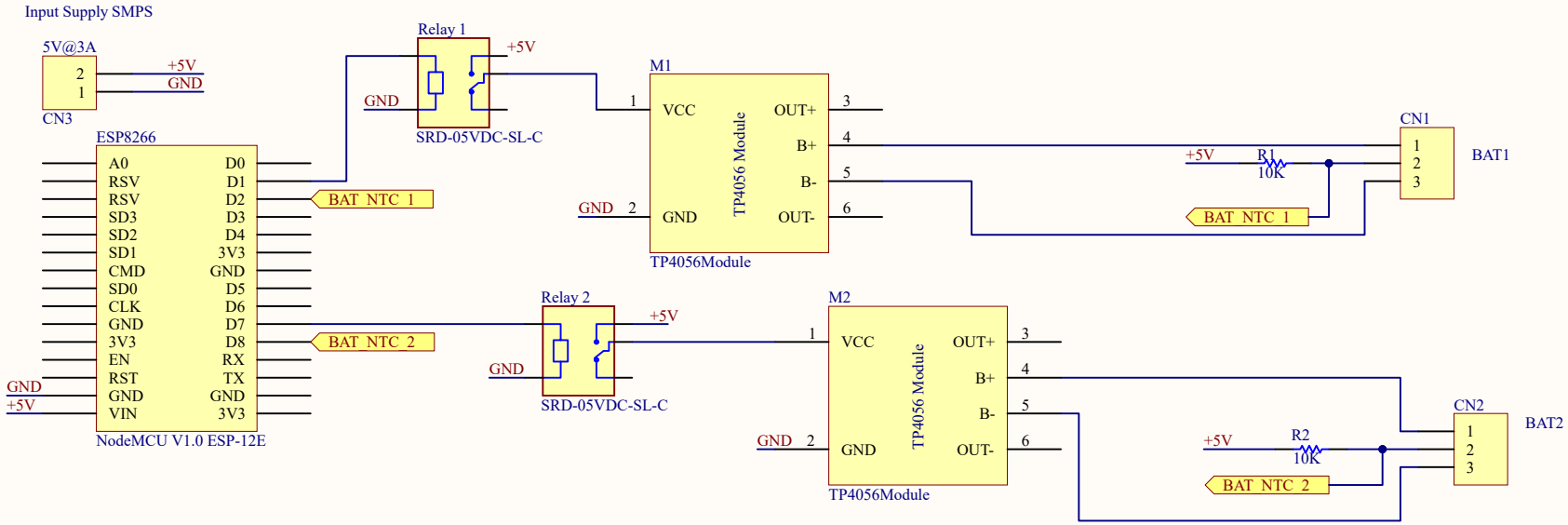

Title	ESP based BMS with Temprature monitor		
Size A4	Number 1		Revision Text
Date: 11-23-2024		Sheet of	
File: C:\Users\rahul\Documents\BMS.SchDoc		Drawn By: Rahul Morya	