AKZ Series

Features

- ϕ4 ~ ϕ10, 105℃, 2000~5000 hours assured
- Extra low impedance capacitors (5% ~ 20% lower than AFZ Series)
- Designed for reflow soldering
- Designed for surface mounting on high-density PCB
- Vibration resistant structure
- RoHS compliant, REACH&SVHC compliant
- AEC-Q200 compliant, Please contact Jarson for more details, test data, information

Marking color: Black

Specifications

Category temp. range	–55℃ to +105℃							
Capacitance tolerance	±20% (120 Hz / +20 ℃)							
Leakage current	I ≦ 0.01 CV or 3 μA whichever is greater (after 2 minutes)							
Tan δ	Please see the attached characteristics list							
Characteristics at low temperature	Rated voltage (V)	6.3	10	16	25	35	50	Impedance ratio at 120 Hz
	Z(-25 ℃)/Z(+20 ℃)	4	3	2	2	2	2	
	Z(-55 ℃)/Z(+20 ℃)	8	5	4	3	3	3	
Endurance	After applying rated working voltage for 2000/5000 hours at +105 ℃ ± 2 ℃, and then being stabilized at +20 ℃, capacitors shall meet the following limits.							
	Test Time	ΦD ≦ 6.3mm, 8ϕx 6.5L, 10ϕx 7.7L: 2000H ϕD ≧ 8mm: 5000H						
	Capacitance change	Within ±30% of the initial value						
	Dissipation factor (tan δ)	Less than 300% of the initial value						
	Leakage current	Within the initial limit						
Shelf life	After storage for 1000 h at +105 ℃ ± 2 ℃ with no voltage applied and then being stabilized at +20 ℃, capacitors shall meet the limits specified in endurance.							
Resistance to soldering heat	After reflow soldering and then being stabilized at +20 ℃, capacitors shall meet the following limits.							
	Capacitance change	Within ±10% of the initial value						
	Dissipation factor (tan δ)	Within the initial limit						
	Leakage current	Within the initial limit						
Ripple Current and Frequency Multipliers	Frequency	50Hz	120Hz	1kHz	10kHz≦			
	Correction Factor	0.6	0.7	0.85	1.0			

Dimensions:

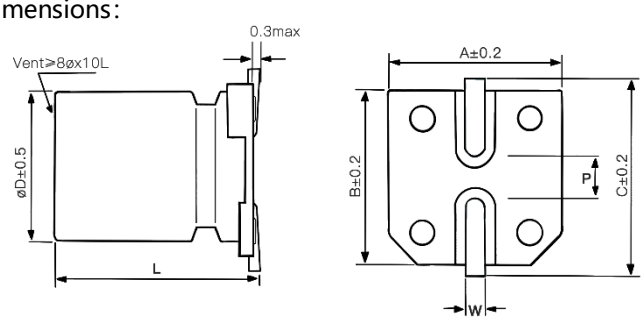

Vibration resistant structure:

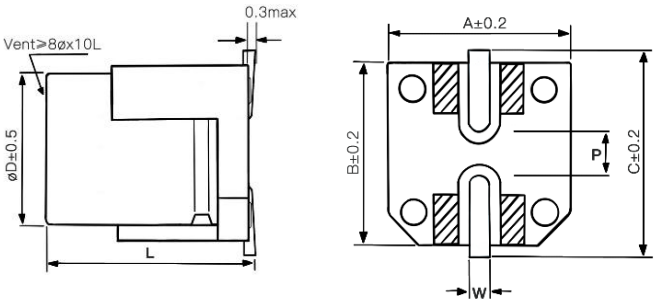

Dimensions						Unit: mm
ϕD	L	A	B	C	W	P±0.2
4	5.8±0.4	4.3	4.3	5.1	0.5~0.8	1.0
5	5.8±0.4	5.3	5.3	6.0	0.5~0.8	1.4
6.3	5.8±0.4	6.6	6.6	7.3	0.5~0.8	2.0
6.3	7.7±0.4	6.6	6.6	7.3	0.5~0.8	2.0
8	6.5±0.5	8.3	8.3	9.1	0.7~1.3	3.1
8	10.5±0.5	8.3	8.3	9.1	0.7~1.3	3.1
10	7.7±0.5	10.3	10.3	11.1	0.7~1.3	4.4
10	10.5±0.5	10.3	10.3	11.1	0.7~1.3	4.4
10	13±0.5	10.3	10.3	11.1	0.7~1.3	4.4
12.5	13.5±0.5	13.0	13.0	14.0	1.1~1.4	4.4
12.5	16±0.5	13.0	13.0	14.0	1.1~1.4	4.4

: Aid electrode

All product specifications in the catalog are subject to change without notice. Ask factory for the current technical specifications before purchase. (CAT.2026C1)

Marking:

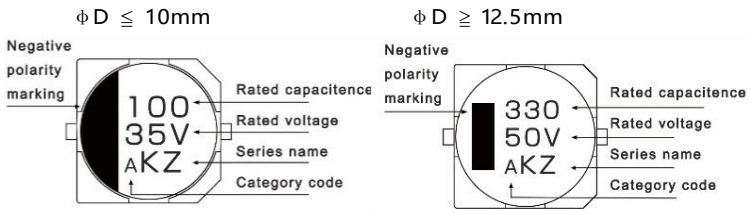

Characteristics list

Rated voltage (V)	Capacitance (±20%) (μF)	Case size		Specification			Part Number④	Taping&Reel
		øD (mm)	L (mm)	Rated ripple current① (mA rms)	Imp.② (Ω)	tan δ③		MPQ (pcs/reel)
6.3	47	5	5.8	160	0.70	0.26	AKZ0J470M0506	1000
	100	5	5.8	160	0.70	0.26	AKZ0J101M0506	1000
		6.3	5.8	240	0.36	0.26	AKZ0J101M0606	1000
	220	6.3	5.8	240	0.36	0.26	AKZ0J221M0606	1000
	330	6.3	7.7	290	0.32	0.26	AKZ0J331M0607	1000
		8	6.5	300	0.26	0.26	AKZ0J331M0806	1000
	470	6.3	7.7	290	0.32	0.26	AKZ0J471M0607	1000
		8	10.5	600	0.16	0.26	AKZ0J471M0810	500
		10	7.7	600	0.18	0.26	AKZ0J471M1007	500
	680	8	10.5	600	0.16	0.26	AKZ0J681M0810	500
		10	7.7	600	0.18	0.26	AKZ0J681M1007	500
	1000	8	10.5	600	0.16	0.26	AKZ0J102M0810	500
	1500	10	10.5	850	0.08	0.26	AKZ0J152M1010	500
	2200	10	13	950	0.08	0.28	AKZ0J222M1013	400
	3300	12.5	13.5	1100	0.08	0.30	AKZ0J332M1313	200
10	33	5	5.8	160	0.70	0.19	AKZ1A330M0506	1000
	47	5	5.8	160	0.70	0.19	AKZ1A470M0506	1000
		6.3	5.8	240	0.36	0.19	AKZ1A470M0606	1000
	100	6.3	5.8	240	0.36	0.19	AKZ1A101M0606	1000
	150	6.3	5.8	240	0.36	0.19	AKZ1A151M0606	1000
	220	6.3	5.8	240	0.36	0.19	AKZ1A221M0606	1000
		6.3	7.7	290	0.32	0.19	AKZ1A221M0607	1000
		8	6.5	300	0.26	0.19	AKZ1A221M0806	1000
	330	6.3	7.7	290	0.32	0.19	AKZ1A331M0607	1000
		8	10.5	600	0.16	0.19	AKZ1A331M0810	500
		10	7.7	600	0.18	0.19	AKZ1A331M1007	500
	470	8	10.5	600	0.16	0.19	AKZ1A471M0810	500
		10	7.7	600	0.18	0.19	AKZ1A471M1007	500
	680	10	10.5	850	0.08	0.19	AKZ1A681M1010	500
	1000	10	10.5	850	0.08	0.19	AKZ1A102M1010	500
	1500	10	13	950	0.08	0.19	AKZ1A152M1013	400
	2200	12.5	13.5	1100	0.07	0.21	AKZ1A222M1313	200

① Rated ripple current (100kHz / +105℃) ② Impedance (100kHz / +20℃) ③ tan δ (120Hz / +20℃)

※Please refer to the page of reflow conditions for reflow profile.

Characteristics list

Rated voltage (V)	Capacitance (±20%) (μF)	Case size		Specification			Part Number④	Taping&Reel
		øD (mm)	L (mm)	Rated ripple current① (mA rms)	Imp.② (Ω)	tan δ③		MPQ (pcs/reel)
16	22	5	5.8	160	0.70	0.16	AKZ1C220M0506	1000
	33	5	5.8	160	0.70	0.16	AKZ1C330M0506	1000
		6.3	5.8	240	0.36	0.16	AKZ1C330M0606	1000
	47	5	5.8	160	0.70	0.16	AKZ1C470M0506	1000
		6.3	5.8	240	0.36	0.16	AKZ1C470M0606	1000
	100	5	5.8	160	0.70	0.16	AKZ1C101M0506	1000
		6.3	5.8	240	0.36	0.16	AKZ1C101M0606	1000
	220	6.3	7.7	290	0.32	0.16	AKZ1C221M0607	1000
		8	6.5	300	0.26	0.16	AKZ1C221M0806	1000
	330	8	10.5	600	0.16	0.16	AKZ1C331M0810	500
		10	7.7	600	0.18	0.16	AKZ1C331M1007	500
	470	8	10.5	600	0.16	0.16	AKZ1C471M0810	500
		10	7.7	600	0.18	0.16	AKZ1C471M1007	500
		10	10.5	850	0.08	0.16	AKZ1C471M1010	500
	680	10	10.5	850	0.08	0.16	AKZ1C681M1010	500
	1000	10	13	950	0.08	0.16	AKZ1C102M1013	400
	1500	12.5	13.5	1100	0.07	0.16	AKZ1C152M1313	200
25	22	5	5.8	160	0.70	0.14	AKZ1E220M0506	1000
	33	5	5.8	160	0.70	0.14	AKZ1E330M0506	1000
		6.3	5.8	240	0.36	0.14	AKZ1E330M0606	1000
	47	6.3	5.8	240	0.36	0.14	AKZ1E470M0606	1000
	100	6.3	5.8	240	0.36	0.14	AKZ1E101M0606	1000
		6.3	7.7	290	0.32	0.14	AKZ1E101M0607	1000
		8	6.5	300	0.26	0.14	AKZ1E101M0806	1000
	220	8	10.5	600	0.16	0.14	AKZ1E221M0810	500
		10	7.7	600	0.18	0.14	AKZ1E221M1007	500
	330	8	10.5	600	0.16	0.14	AKZ1E331M0810	500
	470	10	10.5	850	0.08	0.14	AKZ1E471M1010	500
	680	10	13	950	0.08	0.14	AKZ1E681M1013	400
	1000	12.5	13.5	1100	0.07	0.14	AKZ1E102M1313	200
	1200	12.5	16	1250	0.06	0.14	AKZ1E122M1316	200

① Rated ripple current (100kHz / +105℃)　② Impedance (100kHz / +20℃)　③ tan δ (120Hz / +20℃)

※Please refer to the page of reflow conditions for reflow profile.

All product specifications in the catalog are subject to change without notice. Ask factory for the current technical specifications before purchase. (CAT.2026C1)

Characteristics list

Rated voltage (V)	Capacitance (±20%) (μF)	Case size		Specification			Part Number④	Taping&Reel
		øD (mm)	L (mm)	Rated ripple current① (mA rms)	Imp.② (Ω)	tan δ③		MPQ (pcs/reel)
35	10	5	5.8	160	0.70	0.12	AKZ1V100M0506	1000
	22	5	5.8	160	0.70	0.12	AKZ1V220M0506	1000
		6.3	5.8	240	0.36	0.12	AKZ1V220M0606	1000
	33	6.3	5.8	240	0.36	0.12	AKZ1V330M0606	1000
	47	6.3	5.8	240	0.36	0.12	AKZ1V470M0606	1000
	100	6.3	7.7	290	0.32	0.12	AKZ1V101M0607	1000
		8	10.5	600	0.16	0.12	AKZ1V101M0810	500
	150	8	10.5	600	0.16	0.12	AKZ1V151M0810	500
		10	7.7	600	0.18	0.12	AKZ1V151M1007	500
	220	8	10.5	600	0.16	0.12	AKZ1V221M0810	500
		10	7.7	600	0.18	0.12	AKZ1V221M1007	500
		10	10.5	850	0.08	0.12	AKZ1V221M1010	500
	330	10	10.5	850	0.08	0.12	AKZ1V331M1010	500
	470	10	10.5	850	0.08	0.12	AKZ1V471M1010	500
		10	13	950	0.08	0.12	AKZ1V471M1013	400
		12.5	13.5	1100	0.07	0.12	AKZ1V471M1313	200
	680	12.5	13.5	1100	0.07	0.12	AKZ1V681M1313	200
	820	12.5	16	1250	0.06	0.12	AKZ1V821M1316	200
50	10	5	5.8	90	1.50	0.10	AKZ1H100M0506	1000
		6.3	5.8	170	0.86	0.10	AKZ1H100M0606	1000
	22	6.3	5.8	170	0.86	0.10	AKZ1H220M0606	1000
	33	6.3	7.7	195	0.66	0.10	AKZ1H330M0607	1000
		8	6.5	200	0.63	0.10	AKZ1H330M0806	1000
	47	6.3	7.7	195	0.66	0.10	AKZ1H470M0607	1000
		8	6.5	200	0.63	0.10	AKZ1H470M0806	1000
	100	8	10.5	350	0.32	0.10	AKZ1H101M0810	500
		10	7.7	330	0.36	0.10	AKZ1H101M1007	500
	220	10	10.5	700	0.16	0.10	AKZ1H221M1010	500
	330	10	13	800	0.14	0.10	AKZ1H331M1013	400
		12.5	13.5	900	0.12	0.10	AKZ1H331M1313	200

① Rated ripple current (100kHz / +105℃) ② Impedance (100kHz / +20℃) ③ tan δ (120Hz / +20℃)

※Please refer to the page of reflow conditions for reflow profile.

Part Number System:

SMD E-Cap	AKZ series	16V	220μF	±20 %	6.3 ϕ x7.7L	
A	**KZ**	**1C**	**221**	**M**	**0607**	
Category	Series name	Rated voltage	Capacitance	Tolerance	Case Size	Supplement

Note: For more details, please refer to "Part Number System - SMD Type"