# AKZ Series

Features

- ϕ4 ~ ϕ10, 105℃, 2000~5000 hours assured
- Extra low impedance capacitors (5% ~ 20% lower than AFZ Series)
- Designed for reflow soldering
- Designed for surface mounting on high-density PCB
- Vibration resistant structure
- RoHS compliant, REACH&SVHC compliant
- AEC-Q200 compliant, Please contact Jarson for more details, test data, information

Marking color: Black

## Specifications

| | | | | | | | | |
|---|---|---|---|---|---|---|---|---|
| Category temp. range | –55℃ to +105℃ | | | | | | | |
| Capacitance tolerance | ±20% (120 Hz / +20 ℃) | | | | | | | |
| Leakage current | I ≦ 0.01 CV or 3 μA whichever is greater (after 2 minutes) | | | | | | | |
| Tan δ | Please see the attached characteristics list | | | | | | | |
| Characteristics at low temperature | Rated voltage (V) | 6.3 | 10 | 16 | 25 | 35 | 50 | Impedance ratio at 120 Hz |
| | Z(-25 ℃)/Z(+20 ℃) | 4 | 3 | 2 | 2 | 2 | 2 | |
| | Z(-55 ℃)/Z(+20 ℃) | 8 | 5 | 4 | 3 | 3 | 3 | |
| Endurance | After applying rated working voltage for 2000/5000 hours at +105 ℃ ± 2 ℃, and then being stabilized at +20 ℃, capacitors shall meet the following limits. | | | | | | | |
| | Test Time | ΦD ≦ 6.3mm, 8ϕx 6.5L, 10ϕx 7.7L: 2000H<br>ϕD ≧ 8mm: 5000H | | | | | | |
| | Capacitance change | Within ±30% of the initial value | | | | | | |
| | Dissipation factor (tan δ) | Less than 300% of the initial value | | | | | | |
| | Leakage current | Within the initial limit | | | | | | |
| Shelf life | After storage for 1000 h at +105 ℃ ± 2 ℃ with no voltage applied and then being stabilized at +20 ℃, capacitors shall meet the limits specified in endurance. | | | | | | | |
| Resistance to soldering heat | After reflow soldering and then being stabilized at +20 ℃, capacitors shall meet the following limits. | | | | | | | |
| | Capacitance change | Within ±10% of the initial value | | | | | | |
| | Dissipation factor (tan δ) | Within the initial limit | | | | | | |
| | Leakage current | Within the initial limit | | | | | | |
| Ripple Current and Frequency Multipliers | Frequency | 50Hz | 120Hz | 1kHz | 10kHz≦ | | | |
| | Multiplier | 0.6 | 0.7 | 0.85 | 1.0 | | | |

Dimensions:

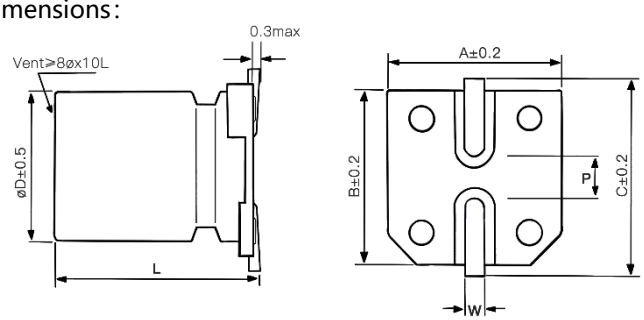


Vibration resistant structure:

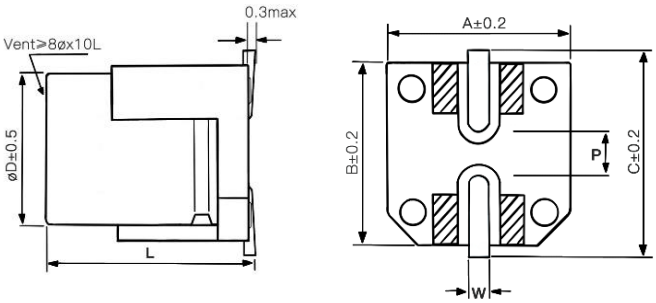


| Dimensions | | | | | | Unit: mm |
|---|---|---|---|---|---|---|
| ϕD | L | A | B | C | W | P±0.2 |
| 4 | 5.8±0.4 | 4.3 | 4.3 | 5.1 | 0.5~0.8 | 1.0 |
| 5 | 5.8±0.4 | 5.3 | 5.3 | 6.0 | 0.5~0.8 | 1.4 |
| 6.3 | 5.8±0.4 | 6.6 | 6.6 | 7.3 | 0.5~0.8 | 2.0 |
| 6.3 | 7.7±0.4 | 6.6 | 6.6 | 7.3 | 0.5~0.8 | 2.0 |
| 8 | 6.5±0.5 | 8.3 | 8.3 | 9.1 | 0.7~1.3 | 3.1 |
| 8 | 10.5±0.5 | 8.3 | 8.3 | 9.1 | 0.7~1.3 | 3.1 |
| 10 | 7.7±0.5 | 10.3 | 10.3 | 11.1 | 0.7~1.3 | 4.4 |
| 10 | 10.5±0.5 | 10.3 | 10.3 | 11.1 | 0.7~1.3 | 4.4 |
| 10 | 13±0.5 | 10.3 | 10.3 | 11.1 | 0.7~1.3 | 4.4 |
| 12.5 | 13.5±0.5 | 13.0 | 13.0 | 14.0 | 1.1~1.4 | 4.4 |
| 12.5 | 16±0.5 | 13.0 | 13.0 | 14.0 | 1.1~1.4 | 4.4 |

: Aid electrode

All product specifications in the catalog are subject to change without notice. Ask factory for the current technical specifications before purchase. (CAT.2026C1)

Marking:

ΦD ≦ 10mm

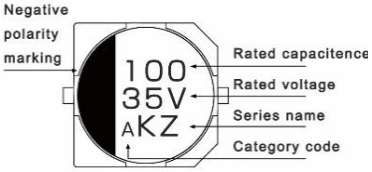


ΦD ≧ 12.5mm

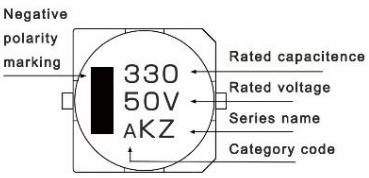


**Characteristics list**

| Rated voltage (V) | Capacitance (±20%) (μF) | Case size øD (mm) | Case size L (mm) | Specification: Rated ripple current① (mA rms) | Specification: Imp.② (Ω) | Specification: tan δ③ | Part Number④ | Taping&Reel MPQ (pcs/reel) |
|---|---|---|---|---|---|---|---|---|
| 6.3 | 47 | 5 | 5.8 | 160 | 0.70 | 0.26 | AKZ0J470M0506 | 1000 |
| | 100 | 5 | 5.8 | 160 | 0.70 | 0.26 | AKZ0J101M0506 | 1000 |
| | | 6.3 | 5.8 | 240 | 0.36 | 0.26 | AKZ0J101M0606 | 1000 |
| | 220 | 6.3 | 5.8 | 240 | 0.36 | 0.26 | AKZ0J221M0606 | 1000 |
| | 330 | 6.3 | 7.7 | 290 | 0.32 | 0.26 | AKZ0J331M0607 | 1000 |
| | | 8 | 6.5 | 300 | 0.26 | 0.26 | AKZ0J331M0806 | 1000 |
| | 470 | 6.3 | 7.7 | 290 | 0.32 | 0.26 | AKZ0J471M0607 | 1000 |
| | | 8 | 10.5 | 600 | 0.16 | 0.26 | AKZ0J471M0810 | 500 |
| | | 10 | 7.7 | 600 | 0.18 | 0.26 | AKZ0J471M1007 | 500 |
| | 680 | 8 | 10.5 | 600 | 0.16 | 0.26 | AKZ0J681M0810 | 500 |
| | | 10 | 7.7 | 600 | 0.18 | 0.26 | AKZ0J681M1007 | 500 |
| | 1000 | 8 | 10.5 | 600 | 0.16 | 0.26 | AKZ0J102M0810 | 500 |
| | 1500 | 10 | 10.5 | 850 | 0.08 | 0.26 | AKZ0J152M1010 | 500 |
| | 2200 | 10 | 13 | 950 | 0.08 | 0.28 | AKZ0J222M1013 | 400 |
| | 3300 | 12.5 | 13.5 | 1100 | 0.08 | 0.30 | AKZ0J332M1313 | 200 |
| 10 | 33 | 5 | 5.8 | 160 | 0.70 | 0.19 | AKZ1A330M0506 | 1000 |
| | 47 | 5 | 5.8 | 160 | 0.70 | 0.19 | AKZ1A470M0506 | 1000 |
| | | 6.3 | 5.8 | 240 | 0.36 | 0.19 | AKZ1A470M0606 | 1000 |
| | 100 | 6.3 | 5.8 | 240 | 0.36 | 0.19 | AKZ1A101M0606 | 1000 |
| | 150 | 6.3 | 5.8 | 240 | 0.36 | 0.19 | AKZ1A151M0606 | 1000 |
| | 220 | 6.3 | 5.8 | 240 | 0.36 | 0.19 | AKZ1A221M0606 | 1000 |
| | | 6.3 | 7.7 | 290 | 0.32 | 0.19 | AKZ1A221M0607 | 1000 |
| | | 8 | 6.5 | 300 | 0.26 | 0.19 | AKZ1A221M0806 | 1000 |
| | 330 | 6.3 | 7.7 | 290 | 0.32 | 0.19 | AKZ1A331M0607 | 1000 |
| | | 8 | 10.5 | 600 | 0.16 | 0.19 | AKZ1A331M0810 | 500 |
| | | 10 | 7.7 | 600 | 0.18 | 0.19 | AKZ1A331M1007 | 500 |
| | 470 | 8 | 10.5 | 600 | 0.16 | 0.19 | AKZ1A471M0810 | 500 |
| | | 10 | 7.7 | 600 | 0.18 | 0.19 | AKZ1A471M1007 | 500 |
| | 680 | 10 | 10.5 | 850 | 0.08 | 0.19 | AKZ1A681M1010 | 500 |
| | 1000 | 10 | 10.5 | 850 | 0.08 | 0.19 | AKZ1A102M1010 | 500 |
| | 1500 | 10 | 13 | 950 | 0.08 | 0.19 | AKZ1A152M1013 | 400 |
| | 2200 | 12.5 | 13.5 | 1100 | 0.07 | 0.21 | AKZ1A222M1313 | 200 |

① Rated ripple current (100kHz / +105℃) ② Impedance (100kHz / +20℃) ③ tan δ (120Hz / +20℃)

※Please refer to the page of reflow conditions for reflow profile.

## Characteristics list

| Rated voltage (V) | Capacitance (±20%) (μF) | Case size | | Specification | | | Part Number④ | Taping&Reel |
|---|---|---|---|---|---|---|---|---|
| | | øD (mm) | L (mm) | Rated ripple current① (mA rms) | Imp.② (Ω) | tan δ③ | | MPQ (pcs/reel) |
| 16 | 22 | 5 | 5.8 | 160 | 0.70 | 0.16 | AKZ1C220M0506 | 1000 |
| | 33 | 5 | 5.8 | 160 | 0.70 | 0.16 | AKZ1C330M0506 | 1000 |
| | | 6.3 | 5.8 | 240 | 0.36 | 0.16 | AKZ1C330M0606 | 1000 |
| | 47 | 5 | 5.8 | 160 | 0.70 | 0.16 | AKZ1C470M0506 | 1000 |
| | | 6.3 | 5.8 | 240 | 0.36 | 0.16 | AKZ1C470M0606 | 1000 |
| | 100 | 5 | 5.8 | 160 | 0.70 | 0.16 | AKZ1C101M0506 | 1000 |
| | | 6.3 | 5.8 | 240 | 0.36 | 0.16 | AKZ1C101M0606 | 1000 |
| | 220 | 6.3 | 7.7 | 290 | 0.32 | 0.16 | AKZ1C221M0607 | 1000 |
| | | 8 | 6.5 | 300 | 0.26 | 0.16 | AKZ1C221M0806 | 1000 |
| | 330 | 8 | 10.5 | 600 | 0.16 | 0.16 | AKZ1C331M0810 | 500 |
| | | 10 | 7.7 | 600 | 0.18 | 0.16 | AKZ1C331M1007 | 500 |
| | 470 | 8 | 10.5 | 600 | 0.16 | 0.16 | AKZ1C471M0810 | 500 |
| | | 10 | 7.7 | 600 | 0.18 | 0.16 | AKZ1C471M1007 | 500 |
| | | 10 | 10.5 | 850 | 0.08 | 0.16 | AKZ1C471M1010 | 500 |
| | 680 | 10 | 10.5 | 850 | 0.08 | 0.16 | AKZ1C681M1010 | 500 |
| | 1000 | 10 | 13 | 950 | 0.08 | 0.16 | AKZ1C102M1013 | 400 |
| | 1500 | 12.5 | 13.5 | 1100 | 0.07 | 0.16 | AKZ1C152M1313 | 200 |
| 25 | 22 | 5 | 5.8 | 160 | 0.70 | 0.14 | AKZ1E220M0506 | 1000 |
| | 33 | 5 | 5.8 | 160 | 0.70 | 0.14 | AKZ1E330M0506 | 1000 |
| | | 6.3 | 5.8 | 240 | 0.36 | 0.14 | AKZ1E330M0606 | 1000 |
| | 47 | 6.3 | 5.8 | 240 | 0.36 | 0.14 | AKZ1E470M0606 | 1000 |
| | 100 | 6.3 | 5.8 | 240 | 0.36 | 0.14 | AKZ1E101M0606 | 1000 |
| | | 6.3 | 7.7 | 290 | 0.32 | 0.14 | AKZ1E101M0607 | 1000 |
| | | 8 | 6.5 | 300 | 0.26 | 0.14 | AKZ1E101M0806 | 1000 |
| | 220 | 8 | 10.5 | 600 | 0.16 | 0.14 | AKZ1E221M0810 | 500 |
| | | 10 | 7.7 | 600 | 0.18 | 0.14 | AKZ1E221M1007 | 500 |
| | 330 | 8 | 10.5 | 600 | 0.16 | 0.14 | AKZ1E331M0810 | 500 |
| | 470 | 10 | 10.5 | 850 | 0.08 | 0.14 | AKZ1E471M1010 | 500 |
| | 680 | 10 | 13 | 950 | 0.08 | 0.14 | AKZ1E681M1013 | 400 |
| | 1000 | 12.5 | 13.5 | 1100 | 0.07 | 0.14 | AKZ1E102M1313 | 200 |
| | 1200 | 12.5 | 16 | 1250 | 0.06 | 0.14 | AKZ1E122M1316 | 200 |

① Rated ripple current (100kHz / +105℃) ② Impedance (100kHz / +20℃) ③ tan δ (120Hz / +20℃)

※Please refer to the page of reflow conditions for reflow profile.

All product specifications in the catalog are subject to change without notice. Ask factory for the current technical specifications before purchase. (CAT.2026C1)

## Characteristics list

| Rated voltage (V) | Capacitance (±20%) (μF) | Case size | | Specification | | | Part Number④ | Taping&Reel |
|---|---|---|---|---|---|---|---|---|
| | | øD (mm) | L (mm) | Rated ripple current① (mA rms) | Imp.② (Ω) | tan δ③ | | MPQ (pcs/reel) |
| 35 | 10 | 5 | 5.8 | 160 | 0.70 | 0.12 | AKZ1V100M0506 | 1000 |
| | 22 | 5 | 5.8 | 160 | 0.70 | 0.12 | AKZ1V220M0506 | 1000 |
| | | 6.3 | 5.8 | 240 | 0.36 | 0.12 | AKZ1V220M0606 | 1000 |
| | 33 | 6.3 | 5.8 | 240 | 0.36 | 0.12 | AKZ1V330M0606 | 1000 |
| | 47 | 6.3 | 5.8 | 240 | 0.36 | 0.12 | AKZ1V470M0606 | 1000 |
| | 100 | 6.3 | 7.7 | 290 | 0.32 | 0.12 | AKZ1V101M0607 | 1000 |
| | | 8 | 10.5 | 600 | 0.16 | 0.12 | AKZ1V101M0810 | 500 |
| | 150 | 8 | 10.5 | 600 | 0.16 | 0.12 | AKZ1V151M0810 | 500 |
| | | 10 | 7.7 | 600 | 0.18 | 0.12 | AKZ1V151M1007 | 500 |
| | 220 | 8 | 10.5 | 600 | 0.16 | 0.12 | AKZ1V221M0810 | 500 |
| | | 10 | 7.7 | 600 | 0.18 | 0.12 | AKZ1V221M1007 | 500 |
| | | 10 | 10.5 | 850 | 0.08 | 0.12 | AKZ1V221M1010 | 500 |
| | 330 | 10 | 10.5 | 850 | 0.08 | 0.12 | AKZ1V331M1010 | 500 |
| | 470 | 10 | 10.5 | 850 | 0.08 | 0.12 | AKZ1V471M1010 | 500 |
| | | 10 | 13 | 950 | 0.08 | 0.12 | AKZ1V471M1013 | 400 |
| | | 12.5 | 13.5 | 1100 | 0.07 | 0.12 | AKZ1V471M1313 | 200 |
| | 680 | 12.5 | 13.5 | 1100 | 0.07 | 0.12 | AKZ1V681M1313 | 200 |
| | 820 | 12.5 | 16 | 1250 | 0.06 | 0.12 | AKZ1V821M1316 | 200 |
| 50 | 10 | 5 | 5.8 | 90 | 1.50 | 0.10 | AKZ1H100M0506 | 1000 |
| | | 6.3 | 5.8 | 170 | 0.86 | 0.10 | AKZ1H100M0606 | 1000 |
| | 22 | 6.3 | 5.8 | 170 | 0.86 | 0.10 | AKZ1H220M0606 | 1000 |
| | 33 | 6.3 | 7.7 | 195 | 0.66 | 0.10 | AKZ1H330M0607 | 1000 |
| | | 8 | 6.5 | 200 | 0.63 | 0.10 | AKZ1H330M0806 | 1000 |
| | 47 | 6.3 | 7.7 | 195 | 0.66 | 0.10 | AKZ1H470M0607 | 1000 |
| | | 8 | 6.5 | 200 | 0.63 | 0.10 | AKZ1H470M0806 | 1000 |
| | 100 | 8 | 10.5 | 350 | 0.32 | 0.10 | AKZ1H101M0810 | 500 |
| | | 10 | 7.7 | 330 | 0.36 | 0.10 | AKZ1H101M1007 | 500 |
| | 220 | 10 | 10.5 | 700 | 0.16 | 0.10 | AKZ1H221M1010 | 500 |
| | 330 | 10 | 13 | 800 | 0.14 | 0.10 | AKZ1H331M1013 | 400 |
| | | 12.5 | 13.5 | 900 | 0.12 | 0.10 | AKZ1H331M1313 | 200 |

① Rated ripple current (100kHz / +105℃) ② Impedance (100kHz / +20℃) ③ tan δ (120Hz / +20℃)

※Please refer to the page of reflow conditions for reflow profile.

Part Number System:

| SMD E-Cap | AKZ series | 16V | 220μF | ±20 % | 6.3 φ x7.7L | |
|---|---|---|---|---|---|---|
| **A** | **KZ** | **1C** | **221** | **M** | **0607** | |
| Category | Series name | Rated voltage | Capacitance | Tolerance | Case Size | Supplement |

④ Note: For more details, please refer to "Part Number System - SMD Type"