AYH Series

Features

- ϕ8 ~ ϕ12.5, 125℃, 4000~5000 hours assured
- Low impedance capacitors
- For automobile modules and other high temperature applications
- Designed for reflow soldering
- Designed for surface mounting on high-density PCB
- Vibration resistant structure
- RoHS compliant, REACH&SVHC compliant
- AEC-Q200 compliant, Please contact Jarson for more details, test data, information

Marking color: Black

Specifications								
Category temp. range	–40℃ to +125℃							
Capacitance tolerance	±20% (120 Hz / +20 ℃)							
Leakage current	I ≦ 0.01 CV or 3 μA whichever is greater (after 2 minutes)							
Tan δ	Please see the attached characteristics list							
Characteristics at low temperature	Rated voltage (V)	10	16	25	35	50	63	Impedance ratio at 120 Hz
	Z (-40 ℃) / Z (+20 ℃)	12	8	6	4	4	4	
Endurance	After applying rated working voltage for 4000 hours at +125 ℃ ± 2 ℃, and then being stabilized at +20 ℃, capacitors shall meet the following limits.							
	Test Time	ϕD = 8~10mm: 4000H ϕD = 12.5mm: 5000H						
	Capacitance change	Within ±30% of the initial value						
	Dissipation factor (tan δ)	Less than 300% of the initial value						
	Leakage current	Within the initial limit						
Shelf life	After storage for 1000 h at +125 ℃ ± 2 ℃ with no voltage applied and then being stabilized at +20 ℃, capacitors shall meet the limits specified in endurance.							
Resistance to soldering heat	After reflow soldering and then being stabilized at +20 ℃, capacitors shall meet the following limits.							
	Capacitance change	Within ±10% of the initial value						
	Dissipation factor (tan δ)	Within the initial limit						
	Leakage current	Within the initial limit						
Ripple Current and Frequency Multipliers	Frequency	50Hz	120Hz	300Hz	1kHz	10kHz≦		
	Multiplier	0.35	0.5	0.64	0.83	1.0		

Dimensions:

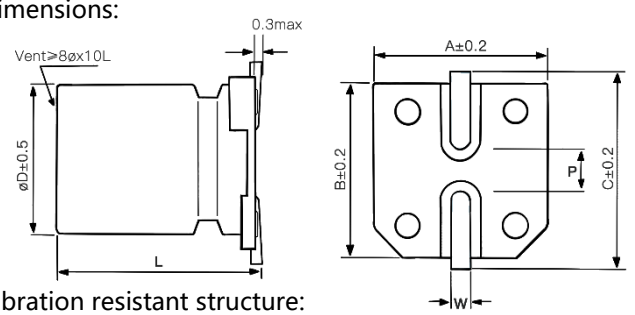

Dimensions						Unit: mm
ϕD	L	A	B	C	W	P±0.2
8	10.5±0.5	8.3	8.3	9.1	0.7~1.3	3.1
10	10.5±0.5	10.3	10.3	11.1	0.7~1.3	4.4
12.5	13.5±0.5	13.0	13.0	14.0	1.1~1.4	4.4
12.5	16±0.5	13.0	13.0	14.0	1.1~1.4	4.4

Vibration resistant structure:

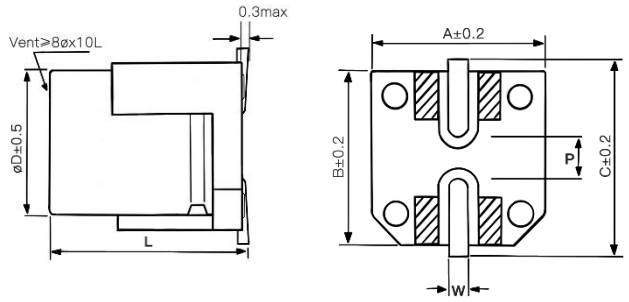

: Aid electrode

Marking:

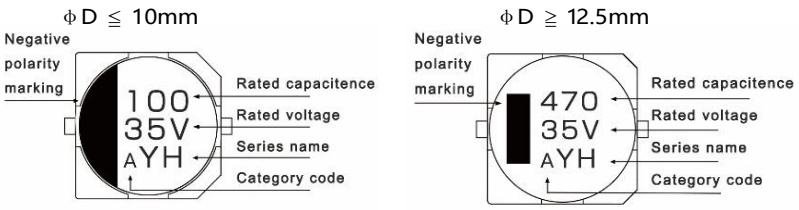

Characteristics list

Rated voltage (V)	Capacitance (±20%) (μF)	Case size		Specification			Part Number④	Taping&Reel
		øD (mm)	L (mm)	Rated ripple current① (mA rms)	Imp.② (Ω)	tan δ③		MPQ (pcs/reel)
10	220	8	10.5	270	0.20	0.30	AYH1A221M0810	500
	330	10	10.5	500	0.15	0.30	AYH1A331M1010	500
	470	10	10.5	500	0.15	0.30	AYH1A471M1010	500
		12.5	13.5	750	0.08	0.30	AYH1A471M1313	200
	680	12.5	13.5	750	0.08	0.30	AYH1A681M1313	200
	1000	12.5	16	750	0.08	0.30	AYH1A102M1316	200
	1500	12.5	16	750	0.08	0.32	AYH1A152M1316	200
16	100	8	10.5	270	0.20	0.23	AYH1C101M0810	500
	220	10	10.5	500	0.15	0.23	AYH1C221M1010	500
	330	10	10.5	500	0.15	0.23	AYH1C331M1010	500
		12.5	13.5	750	0.08	0.23	AYH1C331M1313	200
	470	10	10.5	500	0.15	0.23	AYH1C471M1010	500
		12.5	13.5	750	0.08	0.23	AYH1C471M1313	200
	680	12.5	13.5	750	0.08	0.23	AYH1C681M1313	200
	1000	12.5	16	750	0.08	0.23	AYH1C102M1316	200
25	100	8	10.5	270	0.20	0.18	AYH1E101M0810	500
	220	10	10.5	500	0.15	0.18	AYH1E221M1010	500
	330	10	10.5	500	0.15	0.18	AYH1E331M1010	500
		12.5	13.5	750	0.08	0.18	AYH1E331M1313	200
	470	12.5	13.5	750	0.08	0.18	AYH1E471M1313	200
	560	12.5	16	750	0.08	0.18	AYH1E561M1316	200
35	47	8	10.5	270	0.20	0.16	AYH1V470M0810	500
	100	8	10.5	270	0.20	0.16	AYH1V101M0810	500
		10	10.5	500	0.15	0.16	AYH1V101M1010	500
	220	10	10.5	500	0.15	0.16	AYH1V221M1010	500
		12.5	13.5	750	0.08	0.16	AYH1V221M1313	200
	330	12.5	16	750	0.08	0.16	AYH1V331M1316	200
	470	12.5	16	750	0.08	0.16	AYH1V471M1316	200
50	47	10	10.5	400	0.25	0.16	AYH1H470M1010	500
	100	10	10.5	400	0.25	0.16	AYH1H101M1010	500
		12.5	13.5	600	0.20	0.16	AYH1H101M1313	200
	220	12.5	16	600	0.20	0.16	AYH1H221M1316	200
	330	12.5	16	600	0.20	0.16	AYH1H331M1316	200
63	47	12.5	13.5	500	0.25	0.12	AYH1J470M1313	200
	100	12.5	13.5	500	0.25	0.12	AYH1J101M1313	200
	220	12.5	16	500	0.25	0.12	AYH1J221M1316	200

① Rated ripple current (100kHz / +125℃) ② Impedance (100kHz / +20℃) ③ tan δ (120Hz / +20℃)

※Please refer to the page of reflow conditions for reflow profile.

Part Number System:

SMD E-Cap	AYH series	16V	220μF	±20 %	10ϕx10.5L	
A	**YH**	**1C**	**221**	**M**	**1010**	
Category	Series name	Rated voltage	Capacitance	Tolerance	Case Size	Supplement

④ Note: For more details, please refer to "Part Number System - SMD Type"

All product specifications in the catalog are subject to change without notice. Ask factory for the current technical specifications before purchase. (CAT.2026C1)