ARX Series

Features

- ϕ5 ~ ϕ12.5, 105℃, 2000 hours assured
- Miniaturized, Ultra Low Impedance (Capacitance more than ARZ Series)
- Designed for reflow soldering
- Designed for surface mounting on high-density PCB
- Vibration resistant structure
- RoHS compliant, REACH&SVHC compliant
- AEC-Q200 compliant, Please contact Jarson for more details, test data, information

Marking color: Black

Specifications									
Category temp. range	–55℃ to +105℃								
Capacitance tolerance	±20% (120 Hz / +20 ℃)								
Leakage current	I ≦ 0.01 CV or 3 μA whichever is greater (after 2 minutes)								
Tan δ	Please see the attached characteristics list								
Characteristics at low temperature	Rated voltage (V)	6.3	10	16	25	35	50	63	Impedance ratio at 120 Hz
	Z (-25 ℃) / Z (+20 ℃)	4	3	2	2	2	2	2	
	Z (-55 ℃) / Z (+20 ℃)	8	5	4	3	3	3	3	
Endurance	After applying rated working voltage for 2000 hours at +105 ℃ ± 2 ℃, and then being stabilized at +20 ℃, capacitors shall meet the following limits.								
	Capacitance change	Within ±30% of the initial value							
	Dissipation factor (tan δ)	Less than 200% of the initial value							
	Leakage current	Within the initial limit							
Shelf life	After storage for 1000 h at +105 ℃ ± 2 ℃ with no voltage applied and then being stabilized at +20 ℃, capacitors shall meet the limits specified in endurance.								
Resistance to soldering heat	After reflow soldering and then being stabilized at +20 ℃, capacitors shall meet the following limits.								
	Capacitance change	Within ±10% of the initial value							
	Dissipation factor (tan δ)	Within the initial limit							
	Leakage current	Within the initial limit							
Ripple Current and Frequency Multipliers	Frequency	50Hz	120Hz	1kHz	10kHz≦				
	C ≦ 470μF	0.5	0.65	0.85	1.0				
	C > 470μF	0.55	0.7	0.9	1.0				

Dimensions:

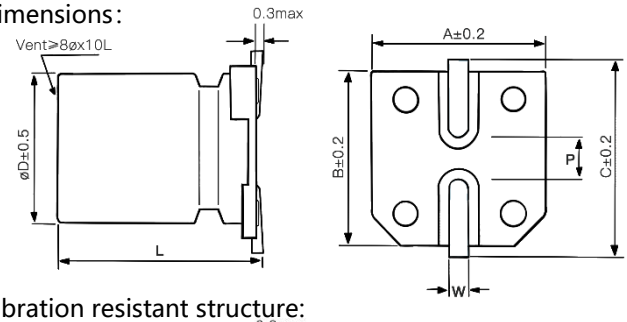

Vibration resistant structure:

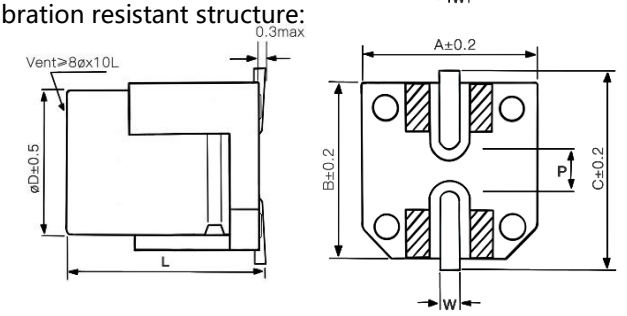

Dimensions						Unit: mm
ϕD	L	A	B	C	W	P±0.2
5	5.8±0.4	5.3	5.3	6.0	0.5~0.8	1.4
6.3	5.8±0.4	6.6	6.6	7.3	0.5~0.8	2.0
6.3	7.7±0.4	6.6	6.6	7.3	0.5~0.8	2.0
8	6.5±0.5	8.3	8.3	9.1	0.7~1.3	3.1
8	10.5±0.5	8.3	8.3	9.1	0.7~1.3	3.1
10	10.5±0.5	10.3	10.3	11.1	0.7~1.3	4.4
12.5	13.5±0.5	13.0	13.0	14.0	1.1~1.4	4.4
12.5	16±0.5	13.0	13.0	14.0	1.1~1.4	4.4

: Aid electrode

All product specifications in the catalog are subject to change without notice. Ask factory for the current technical specifications before purchase. (CAT.2026C1)

Marking:

ΦD ≦ 10mm

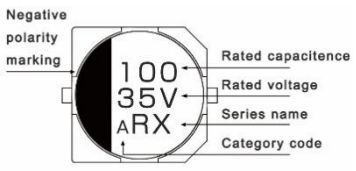

ΦD ≧ 12.5mm

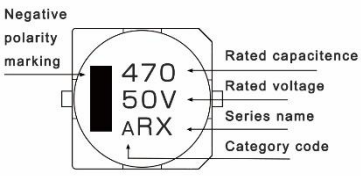

Characteristics list

Rated voltage (V)	Capacitance (±20%) (μF)	Case size øD (mm)	Case size L (mm)	Specification Rated ripple current① (mA rms)	Specification Imp.② (Ω)	Specification tan δ③	Part Number④	Taping&Reel MPQ (pcs/reel)
6.3	220	5	5.8	240	0.36	0.26	ARX0J221M0506	1000
	330	6.3	5.8	300	0.26	0.26	ARX0J331M0606	1000
	470	6.3	7.7	600	0.16	0.26	ARX0J471M0607	1000
	680	6.3	7.7	600	0.16	0.26	ARX0J681M0607	1000
	1500	8	10.5	850	0.08	0.28	ARX0J152M0810	500
	2200	10	10.5	1190	0.06	0.32	ARX0J222M1010	500
10	150	5	5.8	240	0.36	0.19	ARX1A151M0506	1000
	220	6.3	5.8	300	0.26	0.19	ARX1A221M0606	1000
	330	6.3	7.7	600	0.16	0.19	ARX1A331M0607	1000
	470	6.3	7.7	600	0.16	0.19	ARX1A471M0607	1000
	1000	8	10.5	850	0.08	0.19	ARX1A102M0810	500
	1500	10	10.5	1190	0.06	0.21	ARX1A152M1010	500
16	68	5	5.8	240	0.36	0.16	ARX1C680M0506	1000
	100	5	5.8	240	0.36	0.16	ARX1C101M0506	1000
	150	6.3	5.8	300	0.26	0.16	ARX1C151M0606	1000
	220	6.3	5.8	300	0.26	0.16	ARX1C221M0606	1000
	330	6.3	7.7	600	0.16	0.16	ARX1C331M0607	1000
	470	6.3	7.7	600	0.16	0.16	ARX1C471M0607	1000
	680	8	10.5	850	0.08	0.16	ARX1C681M0810	500
	820	8	10.5	850	0.08	0.16	ARX1C821M0810	500
	1000	10	10.5	1190	0.06	0.16	ARX1C102M1010	500
	1200	10	10.5	1190	0.06	0.18	ARX1C122M1010	500
25	47	5	5.8	240	0.36	0.14	ARX1E470M0506	1000
	68	5	5.8	240	0.36	0.14	ARX1E680M0506	1000
	100	6.3	5.8	300	0.26	0.14	ARX1E101M0606	1000
	150	6.3	7.7	600	0.16	0.14	ARX1E151M0607	1000
	220	6.3	7.7	600	0.16	0.14	ARX1E221M0607	1000
	330	6.3	7.7	600	0.16	0.14	ARX1E331M0607	1000
	390	8	10.5	850	0.08	0.14	ARX1E391M0810	500
	470	8	10.5	850	0.08	0.14	ARX1E471M0810	500
	820	10	10.5	1190	0.06	0.14	ARX1E821M1010	500
	1000	10	10.5	1190	0.06	0.14	ARX1E102M1010	500
	1500	12.5	13.5	1210	0.058	0.16	ARX1E152M1313	200
	1800	12.5	16	1420	0.054	0.16	ARX1E182M1316	200

① Rated ripple current (100kHz / +105℃) ② Impedance (100kHz / +20℃) ③ tan δ (120Hz / +20℃)

※Please refer to the page of reflow conditions for reflow profile.

Characteristics list

Rated voltage (V)	Capacitance (±20%) (μF)	Case size		Specification			Part Number④	Taping&Reel
		øD (mm)	L (mm)	Rated ripple current① (mA rms)	Imp.② (Ω)	tan δ③		MPQ (pcs/reel)
35	33	5	5.8	240	0.36	0.12	ARX1V330M0506	1000
	47	5	5.8	240	0.36	0.12	ARX1V470M0506	1000
	68	6.3	5.8	300	0.26	0.12	ARX1V680M0606	1000
	100	6.3	5.8	300	0.26	0.12	ARX1V101M0606	1000
	150	6.3	7.7	600	0.16	0.12	ARX1V151M0607	1000
	220	6.3	7.7	600	0.16	0.12	ARX1V221M0607	1000
	330	8	10.5	850	0.08	0.12	ARX1V331M0810	500
	390	8	10.5	850	0.08	0.12	ARX1V391M0810	500
	470	8	10.5	850	0.08	0.12	ARX1V471M0810	500
		10	10.5	1190	0.06	0.12	ARX1V471M1010	500
	560	10	10.5	1190	0.06	0.12	ARX1V561M1010	500
	680	10	10.5	1190	0.06	0.12	ARX1V681M1010	500
	1000	12.5	13.5	1210	0.058	0.12	ARX1V102M1313	200
	1200	12.5	16	1420	0.054	0.14	ARX1V122M1316	200
50	10	5	5.8	165	0.88	0.10	ARX1H100M0506	1000
	22	5	5.8	165	0.88	0.10	ARX1H220M0506	1000
	47	6.3	5.8	195	0.68	0.10	ARX1H470M0606	1000
	100	6.3	7.7	350	0.34	0.10	ARX1H101M0607	1000
	220	8	10.5	670	0.18	0.10	ARX1H221M0810	500
	330	10	10.5	900	0.12	0.10	ARX1H331M1010	500
	470	12.5	13.5	930	0.11	0.10	ARX1H471M1313	200
	560	12.5	16	1120	0.10	0.10	ARX1H561M1316	200
63	47	6.3	7.7	190	0.80	0.10	ARX1J470M0607	1000
	100	8	10	300	0.40	0.10	ARX1J101M0810	500
	220	10	10	500	0.25	0.10	ARX1J221M1010	500
	330	12.5	13.5	900	0.14	0.10	ARX1J331M1313	200

① Rated ripple current (100kHz / +105℃) ② Impedance (100kHz / +20℃) ③ tan δ (120Hz / +20℃)

※Please refer to the page of reflow conditions for reflow profile.

Part Number System:

SMD E-Cap	ARX series	16V	220μF	±20 %	6.3 φ x5.8L	
A	**RX**	**1C**	**221**	**M**	**0606**	
Category	Series name	Rated voltage	Capacitance	Tolerance	Case Size	Supplement

④ Note: For more details, please refer to "Part Number System - SMD Type"